Liteharbor®
Lighting Technology

Liteharbor Lighting Technology Co.,Ltd.

Add: New Industry Area Hecun Danzao Town Nanhai Foshan City China

TEL: +86-757-81808688 Fax: +86-757-81808685

E-mail: Info@liteharbor.com Http://www.liteharbor.com

Liteharbor®
Lighting Technology

Liteharbor,Harbor of Light !

EDITION V1

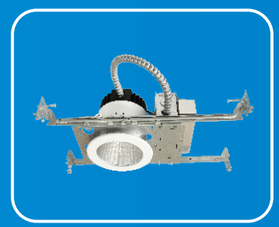
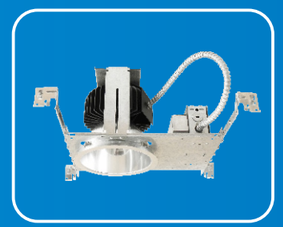

- LED RESIDENTLAL RECESSED DOWM LIGHT
- LED COMMERCIAL RECESSED DOWN LIGHT
- LED ARCHITECTURAL RECESSED DOWN LIGHT
- MULTIPLE LIGHT
- EXIT & EMERGENCY LIGHT
- TRACK LINGHTING

Liteharbor

Liteharbor mission is to be the premier source of lighting fixtures and products for customers in a wide variety of residential, commercial, and industrial settings. To achieve this ambitious goal, Liteharbor Lighting constantly strives for the highest standards of excellence in customer service.

Our unwavering commitment to service and quality has made Liteharbor Lighting one of the world's leading suppliers of lighting fixtures.

From its inception, Liteharbor Lighting has energetically applied its wealth of human, aesthetic, and technical resources to satisfy the rigorous standards and demanding expectations of professional builders and architects. The meticulous care that we have taken to learn about the sciences of architecture and lighting, combined with our relentless quest for perfection in product quality and performance, has enabled Liteharbor Lighting to maintain an edge over its competitors and repeatedly earn the privilege to serve customers in an extensive array of architectural settings.

Listening to our customers, keeping abreast of the latest developments in our industry, and constantly implementing improvements in our industry, and constantly implementing improvements-these are some of theways we have continued our preeminence in the industry.

CONTENTS

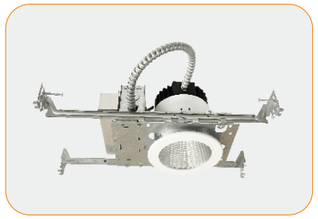

LED RESIDENTLAL RECESSED DOWM LIGHT ▶ 01-18

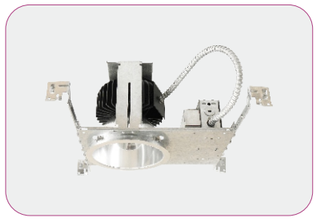

LED COMMERCIAL RECESSED DOWN LIGHT ▶ 19-21

LED ARCHITECTURAL RECESSED DOWN LIGHT ▶ 22-25

MULTIPLE LIGHT ▶ 26-36

EXIT & EMERGENCY LIGHT ▶ 37-41

TRACK LINGHTING ▶ 42-44

LED Downlight

- Liteharbor LED Down Lights designed to provide the utmost in performance and versatility that easily surpassed the competition.
- Liteharbor LED Down Lights are engineered to maximize usable lumen output while maintaining comfortable glare-free operation. A complete palette of interchangeable trims can remarkably enhance the design environment of any commercial or residential installation

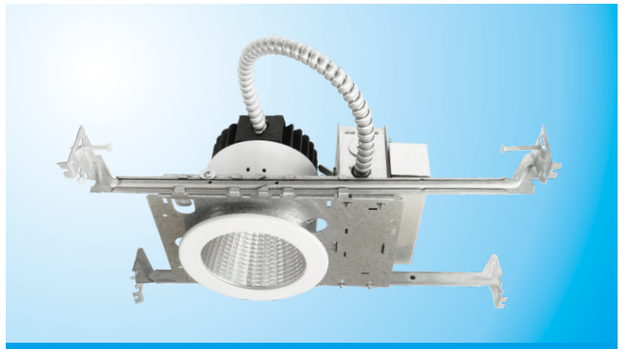

LED RECESSED DOWN LIGHT

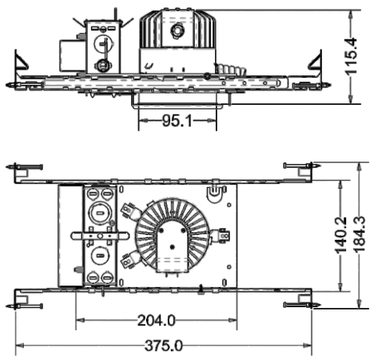

Features
- Uniquely Designed for New and Existing Construction
- Idea for Places Where Edison Base Sockets Have Been Banned
- Environment Friendly no Cd or Hg included
- Good Heat Dissipation More Safe to Use than LED Bulbs
- LED Light Engine is attached to the die-cast heat sink and is easily replaceable and upgradable
- High CRI>80%
- 50000 hours' life time
- Spot Distribution is Idea for Task Lighting Applications

Housing
- Die-formed aluminum for maximum heat dissipation and rust protection
- Designed for New Construction installation and suitable for using in non-insulation covered ceilings
- Housing adjusts to 1/2" to 1 3/8" ceiling thickness. Trims are held in place with high tension clips
- Housing is Non-IC rated must be kept at least 3" away from insulation

Hanger Bar
- Allow housing to be positioned and locked at any point within a 24" joist span.
- Can be shortened for 12" joists
- Contain integral nail
- Hanger fit onto T-bar spline for quick alignment

Junction Box
- ETL listed for through branch wiring
- 1/2" and 3/4" romex wiring knockouts and four romex knockouts with integral strain clamps, all knockouts have true pry-out slots
- J-Box is designed for straight through conduit runs
- Fixture fully assembled including pre-wired ballast for easy installation
- Removable access plates for easy installation

Heat Sink
- All our heat sinks are made of 6063 aluminum
- Scientific design ensure good heat dissipation
- Finish oxidize black color

Reflector Trim
- Especially designed for COB light no glare
- No visible hardware
- All reflector trims using 3002 aluminum ensure good color consistency even though after long time high temperature working
- Transmittance>90%

Durability
- Die-cast system pulls heat from the LED chip allowing continued cool operation for years
- LED output will be maintained at 70% if initial lumens at 50000 hours of operation
- Our superior design allows for installation in construction where Air-Shut™ is required

Thermal Protection
- Standard thermal protection device guards against improper installation and misuse of insulation material

LED Light Engine & Electronic System
- 120V/277V 50/60Hz input
- Less than 20% THD will be produced
- Power Factor>90%
- Thermally protected for additional safety
- Driver is installed on the junction box cover easy accessible for service from the ceiling
- Class 2 power supply
- Over voltage, over current and short circuit protection: Auto recovery
- Dims down to 10% with electronic low voltage (ELV) reverse phase control dimmers
- CRI>80%
- Color Temperature 2700K-6500K
- Cree, Citizen, Epistar all are available
- 16W max

Order Matrix

A	B	C	D	E	F

Item No.: AL35

A	Series
AL35	3.5"/New Construction Non-IC/ LED

B	Input Voltage
	120V
277	277V
U	120-277V

C	Dimmable
	No Dimmable
DM	Dimmable

D	LED Available
Cree	Cree
Citizen	Citizen
Epistar	Epistar

E	Wattage
16	16W
10	10W
8	8W

F	Color Temperature
27K	2700K
35K	3500K
50K	5000K
60K	6000K

LED RECESSED DOWN LIGHT

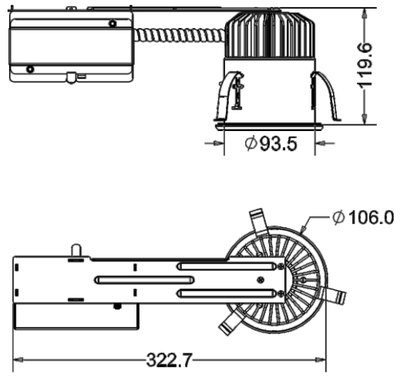

Features
- Uniquely Designed for New and Existing Construction
- Idea for Places Where Edison Base Sockets Have Been Banned
- Environment Friendly no Cd or Hg included
- Good Heat Dissipation More Safe to Use than LED Bulbs
- LED Light Engine is attached to the die-cast heat sink and is easily replaceable and upgradable
- High CRI>80%
- 50000 hours' life time
- Spot Distribution is Idea for Task Lighting Applications

Housing
- Die-formed aluminum for maximum heat dissipation and rust protection
- Designed for New Construction installation and suitable for using in non-insulation covered ceilings
- Housing adjusts to 1/2" to 1 3/8" ceiling thickness. Trims are held in place with high tension clips
- Housing is Non-IC rated must be kept at least 3" away from insulation

Junction Box
- ETL listed for through branch wiring
- 1/2" and 3/4" romex wiring knockouts and four romex knockouts with integral strain clamps, all knockouts have true pry-out slots
- J-Box is designed for straight through conduit runs
- Fixture fully assembled including pre-wired ballast for easy installation
- Removable access plates for easy installation

Heat Sink
- All our heat sinks are made of 6063 aluminum
- Scientific design ensure good heat dissipation
- Finish oxidize black color

Reflector Trim
- Especially designed for COB light no glare
- No visible hardware
- All reflector trims using 3002 aluminum ensure good color consistency even though after long time high temperature working
- Transmittance>90%

Durability
- Die-cast system pulls heat from the LED chip allowing continued cool operation for years
- LED output will be maintained at 70% if initial lumens at 50000 hours of operation
- Our superior design allows for installation in construction where Air-Shut™ is required

Thermal Protection
- Standard thermal protection device guards against improper installation and misuse of insulation material

LED Light Engine & Electronic System
- 120V/277V 50/60Hz input
- Less than 20% THD will be produced
- Power Factor>90%
- Thermally protected for additional safety
- Driver is installed on the junction box cover easy accessible for service from the ceiling
- Class 2 power supply
- Over voltage, over current and short circuit protection: Auto recovery
- Dims down to 10% with electronic low voltage (ELV) reverse phase control dimmers
- CRI>80%
- Color Temperature 2700K-6500K
- Cree, Citizen, Epistar all are available
- 16W max.

Order Matrix

A	B	C	D	E	F

Item No.: AL35R

A	Series
AL35R	3.5"/Remodel/ LED

B	Input Voltage
	120V
277	277V
U	120-277V

C	Dimmable
	No Dimmable
DM	Dimmable

D	LED Available
Cree	Cree
Citizen	Citizen
Epistar	Epistar

E	Wattage
16	16W
10	10W
8	8W

F	Color Temperature
27K	2700K
35K	3500K
50K	5000K
60K	6000K

Liteharbor Lighting Technology Co., Ltd.

www.liteharbor.com

LED RECESSED DOWN LIGHT

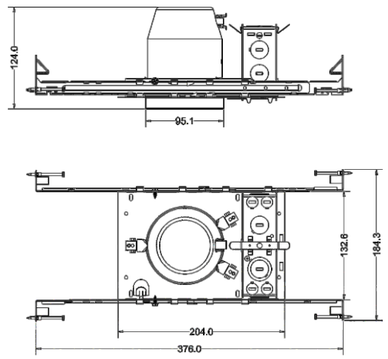

Features
- Uniquely Designed for New and Existing Construction
- Idea for Places Where Edison Base Sockets Have Been Banned
- Environment Friendly no Cd or Hg included
- Good Heat Dissipation More Safe to Use than LED Bulbs
- LED Light Engine is attached to the die-cast heat sink and is easily replaceable and upgradable
- High CRI>80%
- 50000 hours' life time
- Spot Distribution is Idea for Task Lighting Applications

Housing
- Die-formed aluminum for maximum heat dissipation and rust protection
- Designed for New Construction installation and suitable for using in non-insulation covered ceilings
- Housing adjusts to 1/2" to 1 3/8" ceiling thickness. Trims are held in place with high tension clips
- Housing is Non-IC rated must be kept at least 3" away from insulation

Hanger Bar
- Allow housing to be positioned and locked at any point within a 24" joist span.
- Can be shortened for 12" joists
- Contain integral nail
- Hanger fit onto T-bar spline for quick alignment

Junction Box
- ETL listed for through branch wiring
- 1/2" and 3/4" romex wiring knockouts and four romex knockouts with integral strain clamps, all knockouts have true pry-out slots
- J-Box is designed for straight through conduit runs
- Fixture fully assembled including pre-wired ballast for easy installation
- Removable access plates for easy installation

3.5" LED Module
- Engineered with a unique EZ connect wiring system
- EZ connect system meets state and national regulatory mandates
- LED module connects effortlessly to housing.
- Virtually eliminating mis-wiring and potential shock hazards
- Provided with gasket to prevent airflow from heated or air- conditioned spaces, meet all national air flow requirements

Durability
- Die-cast system pulls heat from the LED chip allowing continued cool operation for years
- LED output will be maintained at 70% if initial lumens at 50000 hours of operation
- Our superior design allows for installation in construction where Air-Shut™ is required

Thermal Protection
- Standard thermal protection device guards against improper installation and misuse of insulation material

LED Light Engine & Electronic System
- 120V/277V 50/60Hz input
- Less than 20% THD will be produced
- Power Factor>90%
- Thermally protected for additional safety
- Driver is installed on the junction box cover easy accessible for service from the ceiling
- Class 2 power supply
- Over voltage, over current and short circuit protection: Auto recovery
- Dims down to 10% with electronic low voltage (ELV) reverse phase control dimmers
- CRI>80%
- Color Temperature 2700K-6500K
- Cree, Citizen, Epistar all are available
- 16W max.

Order Matrix

A	B	C	D	E	F

Item No.: AL351

A	Series
AL351	3.5"/New Construction Non-IC/ LED

B	Input Voltage
	120V
277	277V
U	120-277V

C	Dimmable
	No Dimmable
DM	Dimmable

D	LED Available
Cree	Cree
Citizen	Citizen
Epistar	Epistar

E	Wattage
16	16W
10	10W
8	8W

F	Color Temperature
27K	2700K
35K	3500K
50K	5000K
60K	6000K

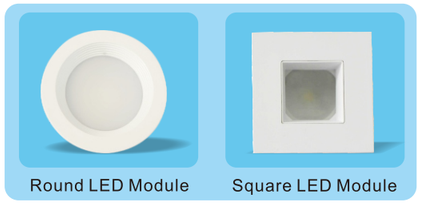
Round LED Module Square LED Module

LED RECESSED DOWN LIGHT

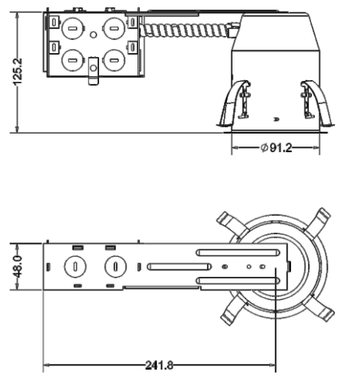

Features
- Uniquely Designed for New and Existing Construction
- Idea for Places Where Edison Base Sockets Have Been Banned
- Environment Friendly no Cd or Hg included
- Good Heat Dissipation More Safe to Use than LED Bulbs
- LED Light Engine is attached to the die-cast heat sink and is easily replaceable and upgradable
- High CRI>80%
- 50000 hours' life time
- Spot Distribution is Idea for Task Lighting Applications

Housing
- Die-formed aluminum for maximum heat dissipation and rust protection
- Designed for New Construction installation and suitable for using in non-insulation covered ceilings
- Housing adjusts to 1/2" to 1 3/8" ceiling thickness. Trims are held in place with high tension clips
- Housing is Non-IC rated must be kept at least 3" away from insulation

Junction Box
- ETL listed for through branch wiring
- 1/2" and 3/4" romex wiring knockouts and four romex knockouts with integral strain clamps, all knockouts have true pry-out slots
- J-Box is designed for straight through conduit runs
- Fixture fully assembled including pre-wired ballast for easy installation
- Removable access plates for easy installation

3.5" LED Module
- Engineered with a unique EZ connect wiring system
- EZ connect system meets state and national regulatory mandates
- LED module connects effortlessly to housing.
- Virtually eliminating mis-wiring and potential shock hazards
- Provided with gasket to prevent airflow from heated or air- conditioned spaces, meet all national air flow requirements

Durability
- Die-cast system pulls heat from the LED chip allowing continued cool operation for years
- LED output will be maintained at 70% if initial lumens at 50000 hours of operation
- Our superior design allows for installation in construction where Air-Shut™ is required

Thermal Protection
- Standard thermal protection device guards against improper installation and misuse of insulation material

LED Light Engine & Electronic System
- 120V/277V 50/60Hz input
- Less than 20% THD will be produced
- Power Factor>90%
- Thermally protected for additional safety
- Driver is installed on the junction box cover easy accessible for service from the ceiling
- Class 2 power supply
- Over voltage, over current and short circuit protection: Auto recovery
- Dims down to 10% with electronic low voltage (ELV) reverse phase control dimmers
- CRI>80%
- Color Temperature 2700K-6500K
- Cree, Citizen, Epistar all are available
- 16W max.

Order Matrix

A	B	C	D	E	F

Item No.: AL351R

A	Series
AL351R	3.5"/Remodel/ LED

B	Input Voltage
	120V
277	277V
U	120-277V

C	Dimmable
	No Dimmable
DM	Dimmable

D	LED Available
Cree	Cree
Citizen	Citizen
Epistar	Epistar

E	Wattage
16	16W
10	10W
8	8W

F	Color Temperature
27K	2700K
35K	3500K
50K	5000K
60K	6000K

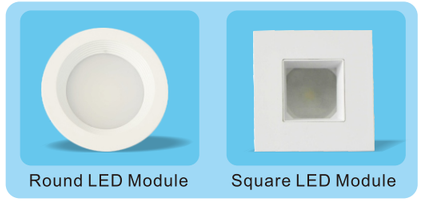

Liteharbor Lighting Technology Co., Ltd.

www.liteharbor.com

LED RECESSED DOWN LIGHT

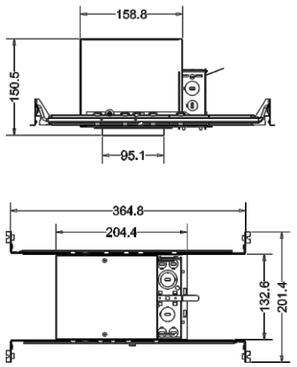

Features
- Uniquely Designed for New and Existing Construction
- Idea for Places Where Edison Base Sockets Have Been Banned
- Environment Friendly no Cd or Hg included
- Good Heat Dissipation More Safe to Use than LED Bulbs
- High CRI
- 50000 hours' life time
- Spot Distribution is Idea for Task Lighting Applications
- LED Light Engine is attached to the die-cast heat sink and is easily replaceable and upgradable

Housing
- Die-formed aluminum for maximum heat dissipation and rust protection
- Designed for New Construction installation and suitable for using in non-insulation covered ceilings
- Housing adjusts to 1/2" to 1 3/8" ceiling thickness. Trims are held in place with high tension clips

Hanger Bar
- Allow housing to be positioned and locked at any point within a 24" joist span.
- Can be shortened for 12" joists
- Can be positioned on long or short axis of the housing
- Contain integral nail
- Hanger fit onto T-bar spline for quick alignment

Junction Box
- ETL listed for through branch wiring
- 1/2" and 3/4" romex wiring knockouts and four romex knockouts with integral strain clamps, all knockouts have true pry-out slots
- J-Box is designed for straight through conduit runs
- Fixture fully assembled including pre-wired ballast for easy installation.
- Removable access plates for easy installation

Durability
- Die-cast system pulls heat from the LED chip allowing continued cool operation for years
- LED output will be maintained at 70% if initial lumens at 50000 hours of operation
- Our superior design allows for installation in construction where Air-Shut™ is required

3.5" LED Module
- Engineered with a unique EZ connect wiring system
- EZ connect system meets state and national regulatory mandates
- LED module connects effortlessly to housing.
- Virtually eliminating mis-wiring and potential shock hazards
- Provided with gasket to prevent airflow from heated or air- conditioned spaces, meet all national air flow requirements

Thermal Protection
- Standard thermal protection device guards against improper installation and misuse of insulation material

LED Light Engine & Electronic System
- 120V/277V 50/60Hz input
- Less than 20% THD will be produced
- Power Factor>90%
- Thermally protected for additional safety
- Driver is installed on the junction box cover easy accessible for service from the ceiling
- Class 2 power supply
- Over voltage, over current and short circuit protection: Auto recovery
- Dims down to 10% with electronic low voltage (ELV) reverse phase control dimmers
- CRI>80%
- Color Temperature 2700K-6500K
- Cree, Citizen, Epistar all are available
- 16W max.

Order Matrix

A	B	C	D	E	F

Item No.: AL351-IA

A	Series
AL351-IA	3.5"/New Construction IC Airtight/ LED

B	Input Voltage
	120V
277	277V
U	120-277V

C	Dimmable
	No Dimmable
DM	Dimmable

D	LED Available
Cree	Cree
Citizen	Citizen
Epistar	Epistar

E	Wattage
16	16W
10	10W
8	8W

F	Color Temperature
27K	2700K
35K	3500K
50K	5000K
60K	6000K

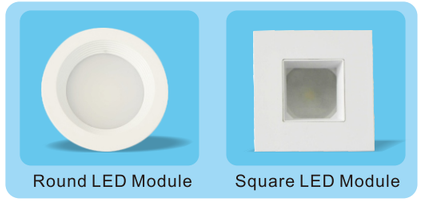

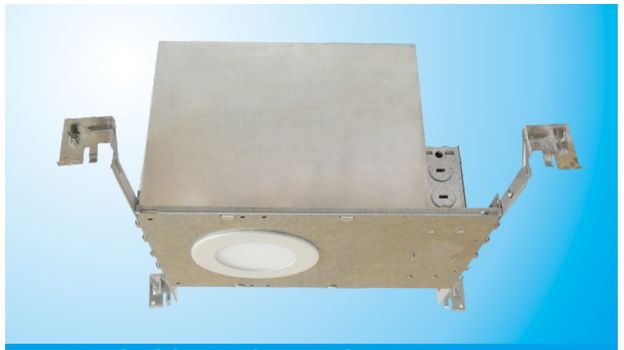

LED RECESSED DOWN LIGHT

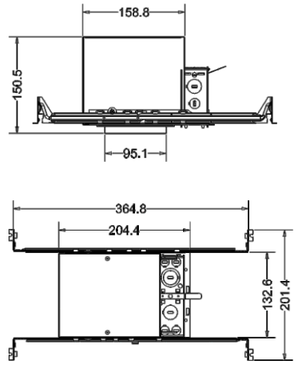

Features
- Uniquely Designed for New and Existing Construction
- Idea for Places Where Edison Base Sockets Have Been Banned
- Environment Friendly no Cd or Hg included
- Good Heat Dissipation More Safe to Use than LED Bulbs
- High CRI
- 50000 hours' life time
- Spot Distribution is Idea for Task Lighting Applications
- Small LED Panel Light Direct be used in Housing and universal Europe style clip very easy for installation and changing new lamp

Housing
- Die-formed aluminum for maximum heat dissipation and rust protection
- Designed for New Construction installation and suitable for using in non-insulation covered ceilings
- Housing adjusts to 1/2" to 1 3/8" ceiling thickness. Trims are held in place with high tension clips

Hanger Bar
- Allow housing to be positioned and locked at any point within a 24" joist span.
- Can be shortened for 12" joists
- Can be positioned on long or short axis of the housing
- Contain integral nail
- Hanger fit onto T-bar spline for quick alignment

Junction Box
- ETL listed for through branch wiring
- 1/2" and 3/4" romex wiring knockouts and four romex knockouts with integral strain clamps, all knockouts have true pry-out slots
- J-Box is designed for straight through conduit runs
- Fixture fully assembled including pre-wired ballast for easy installation.
- Removable access plates for easy installation

Durability
- Die-cast system pulls heat from the LED chip allowing continued cool operation for years
- LED output will be maintained at 70% if initial lumens at 30000 hours of operation
- Our superior design allows for installation in construction where Air-Shut™ is required

Small LED Panel Light Trim
- This is one of our new trying using LED panel light to bring you easier installation and more economic choices.
- 350LM Max

Thermal Protection
- Standard thermal protection device guards against improper installation and misuse of insulation material

LED Light Engine & Electronic System
- 120V/277V 50/60Hz input
- Less than 20% THD will be produced
- Power Factor>90%
- Thermally protected for additional safety
- Driver is installed on the junction box cover easy accessible for service from the ceiling
- Class 2 power supply
- Over voltage, over current and short circuit protection: Auto recovery
- Dims down to 10% with electronic low voltage (ELV) reverse phase control dimmers
- CRI>80%
- Color Temperature 2700K-6500K
- Cree, Citizen, Epistar all are available

Order Matrix

A	B	C	D	E	F

Item No.: AL351-IA-P

A	Series
AL351-IA-P	3.5"/New Construction IC Airtight/ LED Panel Trim

B	Input Voltage
	120V
277	277V
U	120-277V

C	Dimmable
	No Dimmable
DM	Dimmable

D	LED Available
Cree	Cree
Citizen	Citizen
Epistar	Epistar

E	Wattage
3	3W
4	4W

F	Color Temperature
27K	2700K
35K	3500K
50K	5000K
60K	6000K

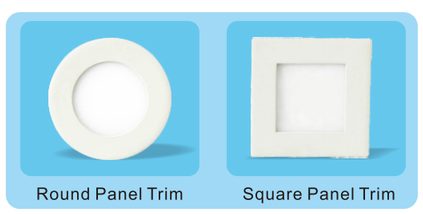

Liteharbor Lighting Technology Co., Ltd.

www.liteharbor.com

LED RECESSED DOWN LIGHT

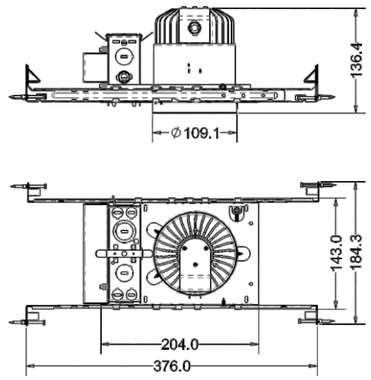

Features
- Uniquely Designed for New and Existing Construction
- Idea for Places Where Edison Base Sockets Have Been Banned
- Environment Friendly no Cd or Hg included
- Good Heat Dissipation More Safe to Use than LED Bulbs
- LED Light Engine is attached to the die-cast heat sink and is easily replaceable and upgradable
- High CRI>80%
- 50000 hours' life time
- Spot Distribution is Idea for Task Lighting Applications

Housing
- Die-formed aluminum for maximum heat dissipation and rust protection
- Designed for New Construction installation and suitable for using in non-insulation covered ceilings
- Housing adjusts to 1/2" to 1 3/8" ceiling thickness. Trims are held in place with high tension clips
- Housing is Non-IC rated must be kept at least 3" away from insulation

Hanger Bar
- Allow housing to be positioned and locked at any point within a 24" joist span.
- Can be shortened for 12" joists
- Contain integral nail
- Hanger fit onto T-bar spline for quick alignment

Junction Box
- ETL listed for through branch wiring
- 1/2" and 3/4" romex wiring knockouts and four romex knockouts with integral strain clamps, all knockouts have true pry-out slots
- J-Box is designed for straight through conduit runs
- Fixture fully assembled including pre-wired ballast for easy installation
- Removable access plates for easy installation

Heat Sink
- All our heat sinks are made of 6063 aluminum
- Scientific design ensure good heat dissipation
- Finish oxidize black color

Reflector Trim
- Especially designed for COB light no glare
- No visible hardware
- All reflector trims using 3002 aluminum ensure good color consistency even though after long time high temperature working
- Transmittance>90%

Durability
- Die-cast system pulls heat from the LED chip allowing continued cool operation for years
- LED output will be maintained at 70% if initial lumens at 50000 hours of operation
- Our superior design allows for installation in construction where Air-Shut™ is required

Thermal Protection
- Standard thermal protection device guards against improper installation and misuse of insulation material

LED Light Engine & Electronic System
- 120V/277V 50/60Hz input
- Less than 20% THD will be produced
- Power Factor>90%
- Thermally protected for additional safety
- Driver is installed on the junction box cover easy accessible for service from the ceiling
- Class 2 power supply
- Over voltage, over current and short circuit protection: Auto recovery
- Dims down to 10% with electronic low voltage (ELV) reverse phase control dimmers
- CRI>80%
- Color Temperature 2700K-6500K
- Cree, Citizen, Epistar all are available
- 16W max.

Order Matrix

A	B	C	D	E	F

Item No.: AL4

A	Series
AL4	4″/New Construction Non-IC/ LED

B	Input Voltage
	120V
277	277V
U	120-277V

C	Dimmable
	No Dimmable
DM	Dimmable

D	LED Available
Cree	Cree
Citizen	Citizen
Epistar	Epistar

E	Wattage
16	16W
10	10W
8	8W

F	Color Temperature
27K	2700K
35K	3500K
50K	5000K
60K	6000K

LED RECESSED DOWN LIGHT

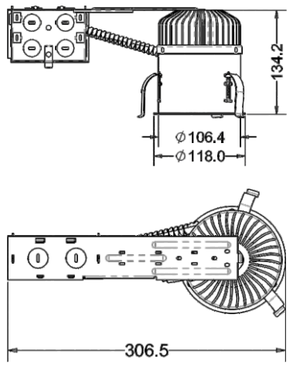

Features
- Uniquely Designed for New and Existing Construction
- Idea for Places Where Edison Base Sockets Have Been Banned
- Environment Friendly no Cd or Hg included
- Good Heat Dissipation More Safe to Use than LED Bulbs
- LED Light Engine is attached to the die-cast heat sink and is easily replaceable and upgradable
- High CRI>80%
- 50000 hours' life time
- Spot Distribution is Idea for Task Lighting Applications

Housing
- Die-formed aluminum for maximum heat dissipation and rust protection
- Designed for New Construction installation and suitable for using in non-insulation covered ceilings
- Housing adjusts to 1/2" to 1 3/8" ceiling thickness. Trims are held in place with high tension clips
- Housing is Non-IC rated must be kept at least 3" away from insulation

Junction Box
- ETL listed for through branch wiring
- 1/2" and 3/4" romex wiring knockouts and four romex knockouts with integral strain clamps, all knockouts have true pry-out slots
- J-Box is designed for straight through conduit runs
- Fixture fully assembled including pre-wired ballast for easy installation
- Removable access plates for easy installation

Heat Sink
- All our heat sinks are made of 6063 aluminum
- Scientific design ensure good heat dissipation
- Finish oxidize black color

Reflector Trim
- Especially designed for COB light no glare
- No visible hardware
- All reflector trims using 3002 aluminum ensure good color consistency even though after long time high temperature working
- Transmittance>90%

Durability
- Die-cast system pulls heat from the LED chip allowing continued cool operation for years
- LED output will be maintained at 70% if initial lumens at 50000 hours of operation
- Our superior design allows for installation in construction where Air-Shut™ is required

Thermal Protection
- Standard thermal protection device guards against improper installation and misuse of insulation material

LED Light Engine & Electronic System
- 120V/277V 50/60Hz input
- Less than 20% THD will be produced
- Power Factor>90%
- Thermally protected for additional safety
- Driver is installed on the junction box cover easy accessible for service from the ceiling
- Class 2 power supply
- Over voltage, over current and short circuit protection: Auto recovery
- Dims down to 10% with electronic low voltage (ELV) reverse phase control dimmers
- CRI>80%
- Color Temperature 2700K-6500K
- Cree, Citizen, Epistar all are available
- 16W max.

Order Matrix

A	B	C	D	E	F

Item No.: AL4R

A	Series
AL4R	4"/Remodel/ LED

B	Input Voltage
	120V
277	277V
U	120-277V

C	Dimmable
	No Dimmable
DM	Dimmable

D	LED Available
Cree	Cree
Citizen	Citizen
Epistar	Epistar

E	Wattage
16	16W
10	10W
8	8W

F	Color Temperature
27K	2700K
35K	3500K
50K	5000K
60K	6000K

Liteharbor Lighting Technology Co., Ltd.

www.liteharbor.com

LED RECESSED DOWN LIGHT

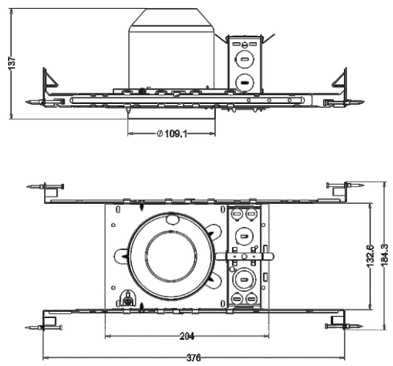

Features
- Uniquely Designed for New and Existing Construction
- Idea for Places Where Edison Base Sockets Have Been Banned
- Environment Friendly no Cd or Hg included
- Good Heat Dissipation More Safe to Use than LED Bulbs
- LED Light Engine is attached to the die-cast heat sink and is easily replaceable and upgradable
- High CRI>80%
- 50000 hours' life time
- Spot Distribution is Idea for Task Lighting Applications

Housing
- Die-formed aluminum for maximum heat dissipation and rust protection
- Designed for New Construction installation and suitable for using in non-insulation covered ceilings
- Housing adjusts to 1/2" to 1 3/8" ceiling thickness. Trims are held in place with high tension clips
- Housing is Non-IC rated must be kept at least 3" away from insulation

Hanger Bar
- Allow housing to be positioned and locked at any point within a 24" joist span.
- Can be shortened for 12" joists
- Can be positioned on long or short axis of the housing
- Contain integral nail
- Hanger fit onto T-bar spline for quick alignment

Junction Box
- ETL listed for through branch wiring
- 1/2" and 3/4" romex wiring knockouts and four romex knockouts with integral strain clamps, all knockouts have true pry-out slots
- J-Box is designed for straight through conduit runs
- Fixture fully assembled including pre-wired ballast for easy installation
- Removable access plates for easy installation

4" LED Module
- Engineered with a unique EZ connect wiring system
- EZ connect system meets state and national regulatory mandates
- LED module connects effortlessly to housing.
- Virtually eliminating mis-wiring and potential shock hazards
- Provided with gasket to prevent airflow from heated or air- conditioned spaces, meet all national air flow requirements

Durability
- Die-cast system pulls heat from the LED chip allowing continued cool operation for years
- LED output will be maintained at 70% if initial lumens at 50000 hours of operation
- Our superior design allows for installation in construction where Air-Shut™ is required

Thermal Protection
- Standard thermal protection device guards against improper installation and misuse of insulation material

LED Light Engine & Electronic System
- 120V/277V 50/60Hz input
- Less than 20% THD will be produced
- Power Factor>90%
- Thermally protected for additional safety
- Driver is installed on the junction box cover easy accessible for service from the ceiling
- Class 2 power supply
- Over voltage, over current and short circuit protection: Auto recovery
- Dims down to 10% with electronic low voltage (ELV) reverse phase control dimmers
- CRI>80%
- Color Temperature 2700K-6500K
- Cree, Citizen, Epistar all are available
- 16W max.

Order Matrix

A	B	C	D	E	F

Item No.: AL41

A	Series
AL41	4"/New Construction Non-IC/ LED

B	Input Voltage
	120V
277	277V
U	120-277V

C	Dimmable
	No Dimmable
DM	Dimmable

D	LED Available
Cree	Cree
Citizen	Citizen
Epistar	Epistar

E	Wattage
16	16W
10	10W
8	8W

F	Color Temperature
27K	2700K
35K	3500K
50K	5000K
60K	6000K

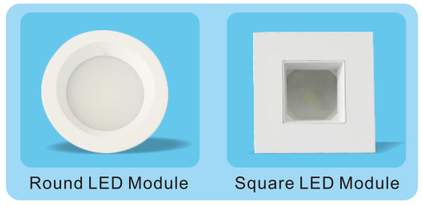
Round LED Module Square LED Module

www.liteharbor.com

LED RECESSED DOWN LIGHT

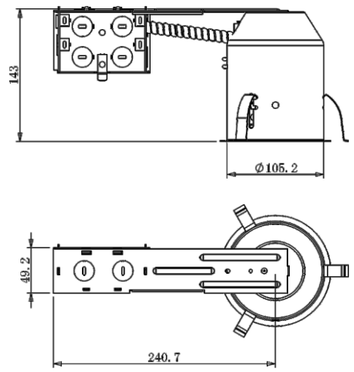

Features
- Uniquely Designed for New and Existing Construction
- Idea for Places Where Edison Base Sockets Have Been Banned
- Environment Friendly no Cd or Hg included
- Good Heat Dissipation More Safe to Use than LED Bulbs
- LED Light Engine is attached to the die-cast heat sink and is easily replaceable and upgradable
- High CRI>80%
- 50000 hours' life time
- Spot Distribution is Idea for Task Lighting Applications

Housing
- Die-formed aluminum for maximum heat dissipation and rust protection
- Designed for New Construction installation and suitable for using in non-insulation covered ceilings
- Housing adjusts to 1/2" to 1 3/8" ceiling thickness. Trims are held in place with high tension clips
- Housing is Non-IC rated must be kept at least 3" away from insulation

Junction Box
- ETL listed for through branch wiring
- 1/2" and 3/4" romex wiring knockouts and four romex knockouts with integral strain clamps, all knockouts have true pry-out slots
- J-Box is designed for straight through conduit runs
- Fixture fully assembled including pre-wired ballast for easy installation
- Removable access plates for easy installation

4" LED Module
- Engineered with a unique EZ connect wiring system
- EZ connect system meets state and national regulatory mandates
- LED module connects effortlessly to housing.
- Virtually eliminating mis-wiring and potential shock hazards
- Provided with gasket to prevent airflow from heated or air- conditioned spaces, meet all national air flow requirements

Durability
- Die-cast system pulls heat from the LED chip allowing continued cool operation for years
- LED output will be maintained at 70% if initial lumens at 50000 hours of operation
- Our superior design allows for installation in construction where Air-Shut™ is required

Thermal Protection
- Standard thermal protection device guards against improper installation and misuse of insulation material

LED Light Engine & Electronic System
- 120V/277V 50/60Hz input
- Less than 20% THD will be produced
- Power Factor>90%
- Thermally protected for additional safety
- Driver is installed on the junction box cover easy accessible for service from the ceiling
- Class 2 power supply
- Over voltage, over current and short circuit protection: Auto recovery
- Dims down to 10% with electronic low voltage (ELV) reverse phase control dimmers
- CRI>80%
- Color Temperature 2700K-6500K
- Cree, Citizen, Epistar all are available
- 16W max.

Order Matrix

A	B	C	D	E	F

Item No.: AL41R

A	Series
AL41R	4"/Remodel/ LED

B	Input Voltage
	120V
277	277V
U	120-277V

C	Dimmable
	No Dimmable
DM	Dimmable

D	LED Available
Cree	Cree
Citizen	Citizen
Epistar	Epistar

E	Wattage
16	16W
10	10W
8	8W

F	Color Temperature
27K	2700K
35K	3500K
50K	5000K
60K	6000K

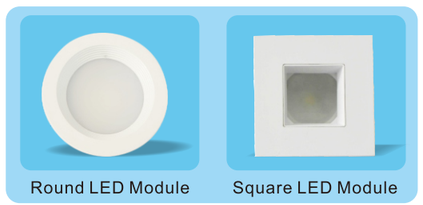
Round LED Module Square LED Module

Liteharbor Lighting Technology Co., Ltd.

www.liteharbor.com

LED RECESSED DOWN LIGHT

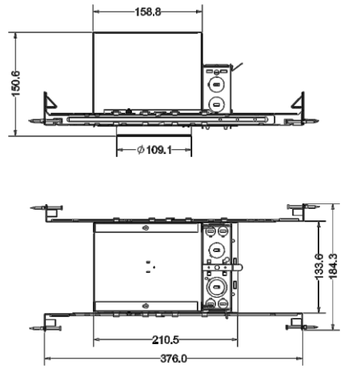

Features
- Uniquely Designed for New and Existing Construction
- Idea for Places Where Edison Base Sockets Have Been Banned
- Environment Friendly no Cd or Hg included
- Good Heat Dissipation More Safe to Use than LED Bulbs
- High CRI
- 50000 hours' life time
- Spot Distribution is Idea for Task Lighting Applications
- LED Light Engine is attached to the die-cast heat sink and is easily replaceable and upgradable

Housing
- Die-formed aluminum for maximum heat dissipation and rust protection
- Designed for New Construction installation and suitable for using in non-insulation covered ceilings
- Housing adjusts to 1/2" to 1 3/8" ceiling thickness. Trims are held in place with high tension clips

Hanger Bar
- Allow housing to be positioned and locked at any point within a 24" joist span.
- Can be shortened for 12" joists
- Can be positioned on long or short axis of the housing
- Contain integral nail
- Hanger fit onto T-bar spline for quick alignment

Junction Box
- ETL listed for through branch wiring
- 1/2" and 3/4" romex wiring knockouts and four romex knockouts with integral strain clamps, all knockouts have true pry-out slots
- J-Box is designed for straight through conduit runs
- Fixture fully assembled including pre-wired ballast for easy installation.
- Removable access plates for easy installation

Durability
- Die-cast system pulls heat from the LED chip allowing continued cool operation for years
- LED output will be maintained at 70% if initial lumens at 50000 hours of operation
- Our superior design allows for installation in construction where Air-Shut™ is required

4" LED Module
- Engineered with a unique EZ connect wiring system
- EZ connect system meets state and national regulatory mandates
- LED module connects effortlessly to housing.
- Virtually eliminating mis-wiring and potential shock hazards
- Provided with gasket to prevent airflow from heated or air- conditioned spaces, meet all national air flow requirements

Thermal Protection
- Standard thermal protection device guards against improper installation and misuse of insulation material

LED Light Engine & Electronic System
- 120V/277V 50/60Hz input
- Less than 20% THD will be produced
- Power Factor>90%
- Thermally protected for additional safety
- Driver is installed on the junction box cover easy accessible for service from the ceiling
- Class 2 power supply
- Over voltage, over current and short circuit protection: Auto recovery
- Dims down to 10% with electronic low voltage (ELV) reverse phase control dimmers
- CRI>80%
- Color Temperature 2700K-6500K
- Cree, Citizen, Epistar all are available
- 16W Max.

Order Matrix

A	B	C	D	E	F

Item No.: AL41-IA

A	Series
AL41-IA	4"/New Construction IC Airtight / LED

B	Input Voltage
	120V
277	277V
U	120-277V

C	Dimmable
	No Dimmable
DM	Dimmable

D	LED Available
Cree	Cree
Citizen	Citizen
Epistar	Epistar

E	Wattage
16	16W
10	10W
8	8W

F	Color Temperature
27K	2700K
35K	3500K
50K	5000K
60K	6000K

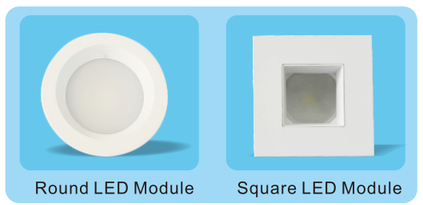
Round LED Module Square LED Module

www.liteharbor.com

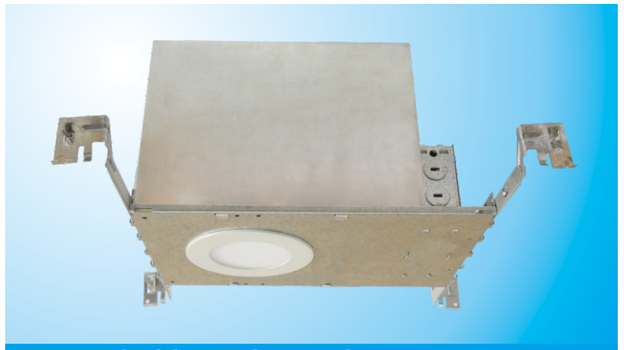

LED RECESSED DOWN LIGHT

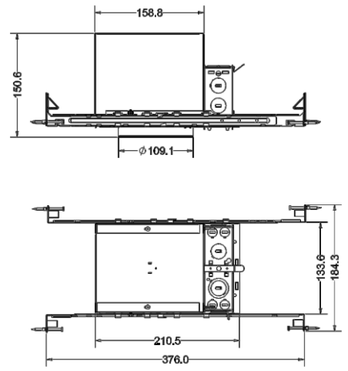

Features
- Uniquely Designed for New and Existing Construction
- Idea for Places Where Edison Base Sockets Have Been Banned
- Environment Friendly no Cd or Hg included
- Good Heat Dissipation More Safe to Use than LED Bulbs
- High CRI
- 50000 hours' life time
- Spot Distribution is Idea for Task Lighting Applications
- Small LED Panel Light Direct be used in Housing and universal Europe style clip very easy for installation and changing new lamp

Housing
- Die-formed aluminum for maximum heat dissipation and rust protection
- Designed for New Construction installation and suitable for using in non-insulation covered ceilings
- Housing adjusts to 1/2" to 1 3/8" ceiling thickness. Trims are held in place with high tension clips

Hanger Bar
- Allow housing to be positioned and locked at any point within a 24" joist span.
- Can be shortened for 12" joists
- Can be positioned on long or short axis of the housing
- Contain integral nail
- Hanger fit onto T-bar spline for quick alignment

Junction Box
- ETL listed for through branch wiring
- 1/2" and 3/4" romex wiring knockouts and four romex knockouts with integral strain clamps, all knockouts have true pry-out slots
- J-Box is designed for straight through conduit runs
- Fixture fully assembled including pre-wired ballast for easy installation.
- Removable access plates for easy installation

Small LED Panel Light Trim
- This is one of our new trying using LED panel light to bring you easier installation and more economic choices.
- 520LM Max

Durability
- Die-cast system pulls heat from the LED chip allowing continued cool operation for years
- LED output will be maintained at 70% if initial lumens at 30000 hours of operation
- Our superior design allows for installation in construction where Air-Shut™ is required

Thermal Protection
- Standard thermal protection device guards against improper installation and misuse of insulation material

LED Light Engine & Electronic System
- 120V/277V 50/60Hz input
- Less than 20% THD will be produced
- Power Factor>90%
- Thermally protected for additional safety
- Driver is installed on the junction box cover easy accessible for service from the ceiling
- Class 2 power supply
- Over voltage, over current and short circuit protection: Auto recovery
- Dims down to 10% with electronic low voltage (ELV) reverse phase control dimmers
- CRI>80%
- Color Temperature 2700K-6500K
- Cree, Citizen, Epistar all are available

Order Matrix

A	B	C	D	E	F

Item No.: AL41-IA-P

A	Series
AL41-IA-P	4"/New Construction IC Airtight / LED Panel Trim

B	Input Voltage
	120V
277	277V
U	120-277V

C	Dimmable
	No Dimmable
DM	Dimmable

D	LED Available
Cree	Cree
Citizen	Citizen
Epistar	Epistar

E	Wattage
3	3W
5	5W
6	6W

F	Color Temperature
27K	2700K
35K	3500K
50K	5000K
60K	6000K

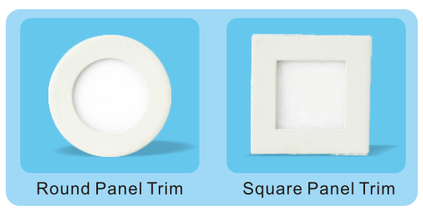

Liteharbor Lighting Technology Co., Ltd.

www.liteharbor.com

LED RECESSED DOWN LIGHT

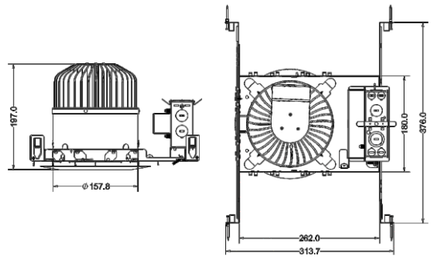

Features
- Uniquely Designed for New and Existing Construction
- Idea for Places Where Edison Base Sockets Have Been Banned
- Environment Friendly no Cd or Hg included
- Good Heat Dissipation More Safe to Use than LED Bulbs
- LED Light Engine is attached to the die-cast heat sink and is easily replaceable and upgradable
- High CRI>80%
- 50000 hours' life time
- Spot Distribution is Idea for Task Lighting Applications

Housing
- Die-formed aluminum for maximum heat dissipation and rust protection
- Designed for New Construction installation and suitable for using in non-insulation covered ceilings
- Housing adjusts to 1/2" to 1 3/8" ceiling thickness. Trims are held in place with high tension clips
- Housing is Non-IC rated must be kept at least 3" away from insulation

Hanger Bar
- Allow housing to be positioned and locked at any point within a 24" joist span.
- Can be shortened for 12" joists
- Contain integral nail
- Hanger fit onto T-bar spline for quick alignment

Junction Box
- ETL listed for through branch wiring
- 1/2" and 3/4" romex wiring knockouts and four romex knockouts with integral strain clamps, all knockouts have true pry-out slots
- J-Box is designed for straight through conduit runs
- Fixture fully assembled including pre-wired ballast for easy installation
- Removable access plates for easy installation

Heat Sink
- All our heat sinks are made of 6063 aluminum
- Scientific design ensure good heat dissipation
- Finish oxidize black color

Reflector Trim
- Especially designed for COB light no glare
- No visible hardware
- All reflector trims using 3002 aluminum ensure good color consistency even though after long time high temperature working
- Transmittance>90%

Durability
- Die-cast system pulls heat from the LED chip allowing continued cool operation for years
- LED output will be maintained at 70% if initial lumens at 50000 hours of operation
- Our superior design allows for installation in construction where Air-Shut™ is required

Thermal Protection
- Standard thermal protection device guards against improper installation and misuse of insulation material

LED Light Engine & Electronic System
- 120V/277V 50/60Hz input
- Less than 20% THD will be produced
- Power Factor>90%
- Thermally protected for additional safety
- Driver is installed on the junction box cover easy accessible for service from the ceiling
- Class 2 power supply
- Over voltage, over current and short circuit protection: Auto recovery
- Dims down to 10% with electronic low voltage (ELV) reverse phase control dimmers
- CRI>80%
- Color Temperature 2700K-6500K
- Cree, Citizen, Epistar all are available
- 24W max.

Order Matrix

A	B	C	D	E	F

Item No.: AL6

A	Series
AL6	6"/New Construction Non-IC/ LED

B	Input Voltage
	120V
277	277V
U	120-277V

C	Dimmable
	No Dimmable
DM	Dimmable

D	LED Available
Cree	Cree
Citizen	Citizen
Epistar	Epistar

E	Wattage
24	24W
18	18W
12	12W

F	Color Temperature
27K	2700K
35K	3500K
50K	5000K
60K	6000K

www.liteharbor.com

LED RECESSED DOWN LIGHT

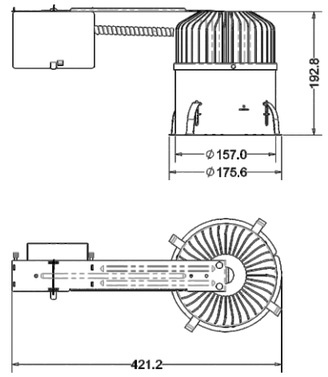

Features
- Uniquely Designed for New and Existing Construction
- Idea for Places Where Edison Base Sockets Have Been Banned
- Environment Friendly no Cd or Hg included
- Good Heat Dissipation More Safe to Use than LED Bulbs
- LED Light Engine is attached to the die-cast heat sink and is easily replaceable and upgradable
- High CRI>80%
- 50000 hours' life time
- Spot Distribution is Idea for Task Lighting Applications

Housing
- Die-formed aluminum for maximum heat dissipation and rust protection
- Designed for New Construction installation and suitable for using in non-insulation covered ceilings
- Housing adjusts to 1/2" to 1 3/8" ceiling thickness. Trims are held in place with high tension clips
- Housing is Non-IC rated must be kept at least 3" away from insulation

Junction Box
- ETL listed for through branch wiring
- 1/2" and 3/4" romex wiring knockouts and four romex knockouts with integral strain clamps, all knockouts have true pry-out slots
- J-Box is designed for straight through conduit runs
- Fixture fully assembled including pre-wired ballast for easy installation
- Removable access plates for easy installation

Heat Sink
- All our heat sinks are made of 6063 aluminum
- Scientific design ensure good heat dissipation
- Finish oxidize black color

Reflector Trim
- Especially designed for COB light no glare
- No visible hardware
- All reflector trims using 3002 aluminum ensure good color consistency even though after long time high temperature working
- Transmittance>90%

Durability
- Die-cast system pulls heat from the LED chip allowing continued cool operation for years
- LED output will be maintained at 70% if initial lumens at 50000 hours of operation
- Our superior design allows for installation in construction where Air-Shut™ is required

Thermal Protection
- Standard thermal protection device guards against improper installation and misuse of insulation material

LED Light Engine & Electronic System
- 120V/277V 50/60Hz input
- Less than 20% THD will be produced
- Power Factor>90%
- Thermally protected for additional safety
- Driver is installed on the junction box cover easy accessible for service from the ceiling
- Class 2 power supply
- Over voltage, over current and short circuit protection: Auto recovery
- Dims down to 10% with electronic low voltage (ELV) reverse phase control dimmers
- CRI>80%
- Color Temperature 2700K-6500K
- Cree, Citizen, Epistar all are available
- 24W max.

Order Matrix

A	B	C	D	E	F

Item No.: AL6R

A	Series
AL6R	6"/Remodel/ LED

B	Input Voltage
	120V
277	277V
U	120-277V

C	Dimmable
	No Dimmable
DM	Dimmable

D	LED Available
Cree	Cree
Citizen	Citizen
Epistar	Epistar

E	Wattage
24	24W
18	18W
12	12W

F	Color Temperature
27K	2700K
35K	3500K
50K	5000K
60K	6000K

Liteharbor Lighting Technology Co., Ltd.

www.liteharbor.com

LED RECESSED DOWN LIGHT

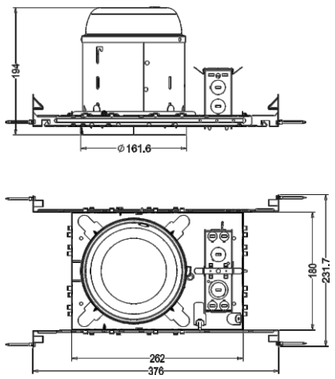

Features
- Uniquely Designed for New and Existing Construction
- Idea for Places Where Edison Base Sockets Have Been Banned
- Environment Friendly no Cd or Hg included
- Good Heat Dissipation More Safe to Use than LED Bulbs
- LED Light Engine is attached to the die-cast heat sink and is easily replaceable and upgradable
- High CRI>80%
- 50000 hours' life time
- Spot Distribution is Idea for Task Lighting Applications

Housing
- Die-formed aluminum for maximum heat dissipation and rust protection
- Designed for New Construction installation and suitable for using in non-insulation covered ceilings
- Housing adjusts to 1/2" to 1 3/8" ceiling thickness. Trims are held in place with high tension clips
- Housing is Non-IC rated must be kept at least 3" away from insulation

Hanger Bar
- Allow housing to be positioned and locked at any point within a 24" joist span.
- Can be shortened for 12" joists
- Contain integral nail
- Hanger fit onto T-bar spline for quick alignment

Junction Box
- ETL listed for through branch wiring
- 1/2" and 3/4" romex wiring knockouts and four romex knockouts with integral strain clamps, all knockouts have true pry-out slots
- J-Box is designed for straight through conduit runs
- Fixture fully assembled including pre-wired ballast for easy installation
- Removable access plates for easy installation

6" LED Module
- Engineered with a unique EZ connect wiring system
- EZ connect system meets state and national regulatory mandates
- LED module connects effortlessly to housing.
- Virtually eliminating mis-wiring and potential shock hazards
- Provided with gasket to prevent airflow from heated or air- conditioned spaces, meet all national air flow requirements

Durability
- Die-cast system pulls heat from the LED chip allowing continued cool operation for years
- LED output will be maintained at 70% if initial lumens at 50000 hours of operation
- Our superior design allows for installation in construction where Air-Shut™ is required

Thermal Protection
- Standard thermal protection device guards against improper installation and misuse of insulation material

LED Light Engine & Electronic System
- 120V/277V 50/60Hz input
- Less than 20% THD will be produced
- Power Factor>90%
- Thermally protected for additional safety
- Driver is installed on the junction box cover easy accessible for service from the ceiling
- Class 2 power supply
- Over voltage, over current and short circuit protection: Auto recovery
- Dims down to 10% with electronic low voltage (ELV) reverse phase control dimmers
- CRI>80%
- Color Temperature 2700K-6500K
- Cree, Citizen, Epistar all are available
- 24W max.

Order Matrix

A	B	C	D	E	F

Item No.: AL61

A	Series
AL61	6"/New Construction Non-IC/ LED

B	Input Voltage
	120V
277	277V
U	120-277V

C	Dimmable
	No Dimmable
DM	Dimmable

D	LED Available
Cree	Cree
Citizen	Citizen
Epistar	Epistar

E	Wattage
24	24W
18	18W
12	12W

F	Color Temperature
27K	2700K
35K	3500K
50K	5000K
60K	6000K

Round LED Module

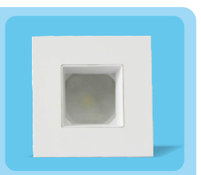

Square LED Module

www.liteharbor.com

LED RECESSED DOWN LIGHT

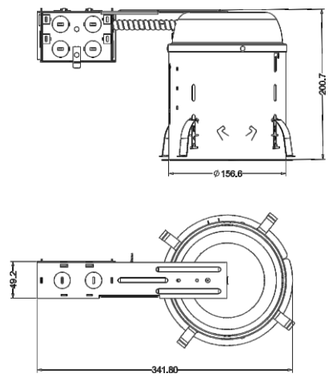

Features
- Uniquely Designed for New and Existing Construction
- Idea for Places Where Edison Base Sockets Have Been Banned
- Environment Friendly no Cd or Hg included
- Good Heat Dissipation More Safe to Use than LED Bulbs
- LED Light Engine is attached to the die-cast heat sink and is easily replaceable and upgradable
- High CRI>80%
- 50000 hours' life time
- Spot Distribution is Idea for Task Lighting Applications

Housing
- Die-formed aluminum for maximum heat dissipation and rust protection
- Designed for New Construction installation and suitable for using in non-insulation covered ceilings
- Housing adjusts to 1/2" to 1 3/8" ceiling thickness. Trims are held in place with high tension clips
- Housing is Non-IC rated must be kept at least 3" away from insulation

Junction Box
- ETL listed for through branch wiring
- 1/2" and 3/4" romex wiring knockouts and four romex knockouts with integral strain clamps, all knockouts have true pry-out slots
- J-Box is designed for straight through conduit runs
- Fixture fully assembled including pre-wired ballast for easy installation
- Removable access plates for easy installation

6" LED Module
- Engineered with a unique EZ connect wiring system
- EZ connect system meets state and national regulatory mandates
- LED module connects effortlessly to housing.
- Virtually eliminating mis-wiring and potential shock hazards
- Provided with gasket to prevent airflow from heated or air- conditioned spaces, meet all national air flow requirements

Durability
- Die-cast system pulls heat from the LED chip allowing continued cool operation for years
- LED output will be maintained at 70% if initial lumens at 50000 hours of operation
- Our superior design allows for installation in construction where Air-Shut™ is required

Thermal Protection
- Standard thermal protection device guards against improper installation and misuse of insulation material

LED Light Engine & Electronic System
- 120V/277V 50/60Hz input
- Less than 20% THD will be produced
- Power Factor>90%
- Thermally protected for additional safety
- Driver is installed on the junction box cover easy accessible for service from the ceiling
- Class 2 power supply
- Over voltage, over current and short circuit protection: Auto recovery
- Dims down to 10% with electronic low voltage (ELV) reverse phase control dimmers
- CRI>80%
- Color Temperature 2700K-6500K
- Cree, Citizen, Epistar all are available
- 24W max

Order Matrix

A	B	C	D	E	F

Item No.: AL61R

A	Series
AL61R	6"/Remodel/ LED

B	Input Voltage
	120V
277	277V
U	120-277V

C	Dimmable
	No Dimmable
DM	Dimmable

D	LED Available
Cree	Cree
Citizen	Citizen
Epistar	Epistar

E	Wattage
24	24W
18	18W
12	12W

F	Color Temperature
27K	2700K
35K	3500K
50K	5000K
60K	6000K

Round LED Module Square LED Module

Liteharbor Lighting Technology Co., Ltd.

www.liteharbor.com

LED RECESSED DOWN LIGHT

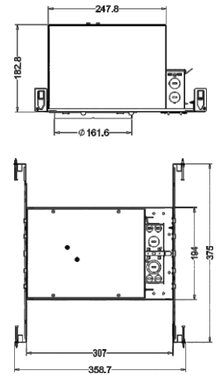

Features
- Uniquely Designed for New and Existing Construction
- Idea for Places Where Edison Base Sockets Have Been Banned
- Environment Friendly no Cd or Hg included
- Good Heat Dissipation More Safe to Use than LED Bulbs
- High CRI
- 50000 hours' life time
- Spot Distribution is Idea for Task Lighting Applications
- LED Light Engine is attached to the die-cast heat sink and is easily replaceable and upgradable

Housing
- Die-formed aluminum for maximum heat dissipation and rust protection
- Designed for New Construction installation and suitable for using in non-insulation covered ceilings
- Housing adjusts to 1/2" to 1 3/8" ceiling thickness. Trims are held in place with high tension clips

Hanger Bar
- Allow housing to be positioned and locked at any point within a 24" joist span.
- Can be shortened for 12" joists
- Can be positioned on long or short axis of the housing
- Contain integral nail
- Hanger fit onto T-bar spline for quick alignment

Junction Box
- ETL listed for through branch wiring
- 1/2" and 3/4" romex wiring knockouts and four romex knockouts with integral strain clamps, all knockouts have true pry-out slots
- J-Box is designed for straight through conduit runs
- Fixture fully assembled including pre-wired ballast for easy installation.
- Removable access plates for easy installation

Durability
- Die-cast system pulls heat from the LED chip allowing continued cool operation for years
- LED output will be maintained at 70% if initial lumens at 50000 hours of operation
- Our superior design allows for installation in construction where Air-Shut™ is required

6" LED Module
- Engineered with a unique EZ connect wiring system
- EZ connect system meets state and national regulatory mandates
- LED module connects effortlessly to housing.
- Virtually eliminating mis-wiring and potential shock hazards
- Provided with gasket to prevent airflow from heated or air- conditioned spaces, meet all national air flow requirements

Thermal Protection
- Standard thermal protection device guards against improper installation and misuse of insulation material

LED Light Engine & Electronic System
- 120V/277V 50/60Hz input
- Less than 20% THD will be produced
- Power Factor>90%
- Thermally protected for additional safety
- Driver is installed on the junction box cover easy accessible for service from the ceiling
- Class 2 power supply
- Over voltage, over current and short circuit protection: Auto recovery
- Dims down to 10% with electronic low voltage (ELV) reverse phase control dimmers
- CRI>80%
- Color Temperature 2700K-6500K
- Cree, Citizen, Epistar all are available

Order Matrix

A	B	C	D	E	F

Item No.: AL61-IA

A	Series
AL61-IA	6"/New Construction IC Airtight / LED

B	Input Voltage
	120V
277	277V
U	120-277V

C	Dimmable
	No Dimmable
DM	Dimmable

D	LED Available
Cree	Cree
Citizen	Citizen
Epistar	Epistar

E	Wattage
24	24W
18	18W
12	12W

F	Color Temperature
27K	2700K
35K	3500K
50K	5000K
60K	6000K

Round LED Module Square LED Module

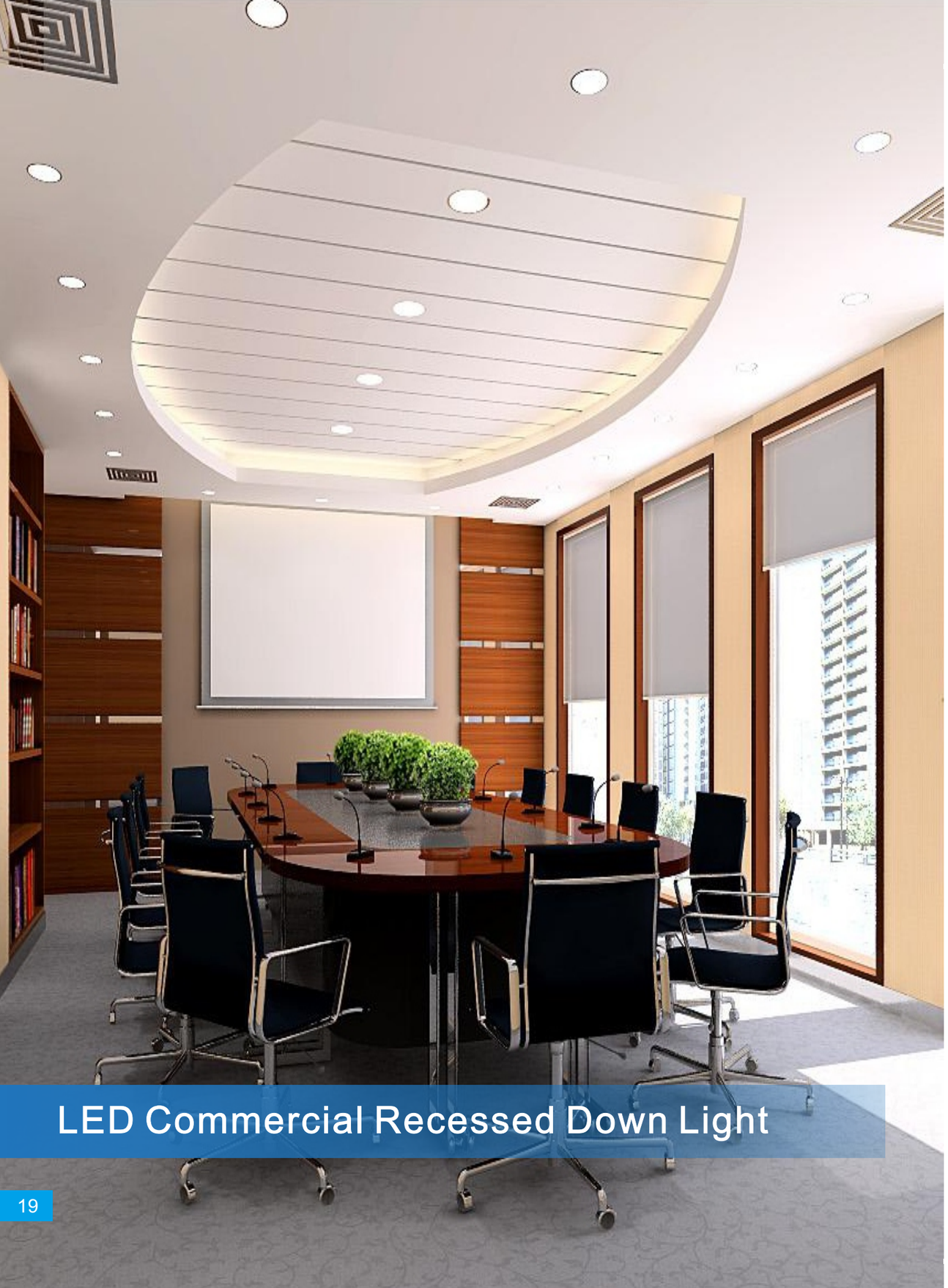

LED Commercial Recessed Down Light

6" LED COMMERCIAI RECESSED DOWN LIGHT

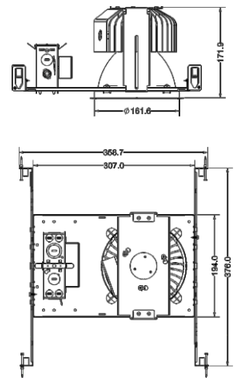

Features
- Uniquely Designed for New and Existing Construction
- Idea for Places Where Edison Base Sockets Have Been Banned
- Environment Friendly no Cd or Hg included
- Good Heat Dissipation More Safe to Use than LED Bulbs
- High CRI
- 50000 hours' life time
- LED Light Engine is attached to the die-cast heat sink and is easily replaceable and upgradable
- Energy Saving

Mounting
- Constructed of 16-gauge steel
- Frame includes bar hangers with nails for wood joist
- Installed spring steel friction clips
- Adjustable 14"-24" for precise placement
- Bar hangers include T-bar notch for T-grid ceiling installations
- Fully assembled for ease of installation
- Must be kept at least 3" away from insulation

Junction Box
- Pre-wired junction box provided with 1/2" and 3/4" knockouts
- Provided with removable access plates
- Knockouts equipped with pry out slots
- All leads are #18AWG wire, the ground wire connected to the bottom and quick connectors are supplied on all leads
- Through branch circuit wiring(4 in, 4 out)

Reflector
- High quality reflector with 1.2mm thickness available in multiple architectural finishes and types
- Gather light scattered by the LED chip and shape it into functional beams that minimize brightness and glare while eliminating lamp image
- Transmittance>90%
- Optional painted white flange is available

Durability
- Die-cast system pulls heat from the LED chip allowing continued cool operation for years
- LED output will be maintained at 70% if initial lumens at 50000 hours of operation

Thermal Protection
- Standard thermal protection device guards against improper installation and misuse of insulation material

LED Light Engine & Electronic System
- 120V/277V 50/60Hz input
- Less than 20% THD will be produced
- Power Factor>90%
- Thermally protected for additional safety
- Driver is installed on the junction box cover easy accessible for service from the ceiling
- Class 2 power supply
- Over voltage, over current and short circuit protection: Auto recovery
- Dims down to 10% with electronic low voltage (ELV) reverse phase control dimmers
- CRI>80%
- Color Temperature 2700K-6500K
- Cree, Citizen, Epistar all are available
- Wattage and Lumens for Choices

Input Power	Lumens
30W(+/-5%)	2500
24W(+/-5%)	1920
16W(+/-5%)	1280

Order Matrix

A	B	C	D	E	F

Item No.: AL6-VC

A	Series
AL6-VC	6" Vertical Commercial Housing LED

B	Input Voltage
	120V
277	277V
U	120-277V

C	Dimmable
	No Dimmable
DM	Dimmable

D	LED Available
Cree	Cree
Citizen	Citizen
Epistar	Epistar

E	Wattage
30	30W
24	24W
16	16W

F	Color Temperature
27K	2700K
35K	3500K
50K	5000K
60K	6000K

www.liteharbor.com

8" LED COMMERCIAI RECESSED DOWN LIGHT

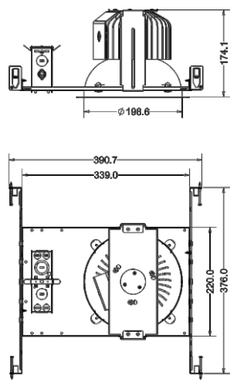

Features
- Uniquely Designed for New and Existing Construction
- Idea for Places Where Edison Base Sockets Have Been Banned
- Environment Friendly no Cd or Hg included
- Good Heat Dissipation More Safe to Use than LED Bulbs
- High CRI
- 50000 hours' life time
- LED Light Engine is attached to the die-cast heat sink and is easily replaceable and upgradable
- Energy Saving

Mounting
- Constructed of 16-gauge steel
- Frame includes bar hangers with nails for wood joist
- Installed spring steel friction clips
- Adjustable 14"-24" for precise placement
- Bar hangers include T-bar notch for T-grid ceiling installations
- Fully assembled for ease of installation
- Must be kept at least 3" away from insulation

Junction Box
- Pre-wired junction box provided with 1/2" and 3/4" knockouts
- Provided with removable access plates
- Knockouts equipped with pry out slots
- All leads are #18AWG wire, the ground wire connected to the bottom and quick connectors are supplied on all leads
- Through branch circuit wiring (4 in, 4 out)

Reflector
- High quality reflector with 1.2mm thickness available in multiple architectural finishes and types
- Gather light scattered by the LED chip and shape it into functional beams that minimize brightness and glare while eliminating lamp image
- Transmittance>90%
- Optional painted white flange is available

Durability
- Die-cast system pulls heat from the LED chip allowing continued cool operation for years
- LED output will be maintained at 70% if initial lumens at 50000 hours of operation

Thermal Protection
- Standard thermal protection device guards against improper installation and misuse of insulation material

LED Light Engine & Electronic System
- 120V/277V 50/60Hz input
- Less than 20% THD will be produced
- Power Factor>90%
- Thermally protected for additional safety
- Driver is installed on the junction box cover easy accessible for service from the ceiling
- Class 2 power supply
- Over voltage, over current and short circuit protection: Auto recovery
- Dims down to 10% with electronic low voltage (ELV) reverse phase control dimmers
- CRI>80%
- Color Temperature 2700K-6500K
- Cree, Citizen, Epistar all are available
- Wattage and Lumens for Choices

Input Power	Lumens
40W(+/-5%)	3200
30W(+/-5%)	2700
24W(+/-5%)	1920
16W(+/-5%)	1280

Order Matrix

A	B	C	D	E	F

Item No.: AL8-VC

A	Series
AL8-VC	8" Vertical Commercial Housing LED

B	Input Voltage
	120V
277	277V
U	120-277V

C	Dimmable
	No Dimmable
DM	Dimmable

D	LED Available
Cree	Cree
Citizen	Citizen
Epistar	Epistar

E	Wattage
40	40W
30	30W
24	24W
16	16W

F	Color Temperature
27K	2700K
35K	3500K
50K	5000K
60K	6000K

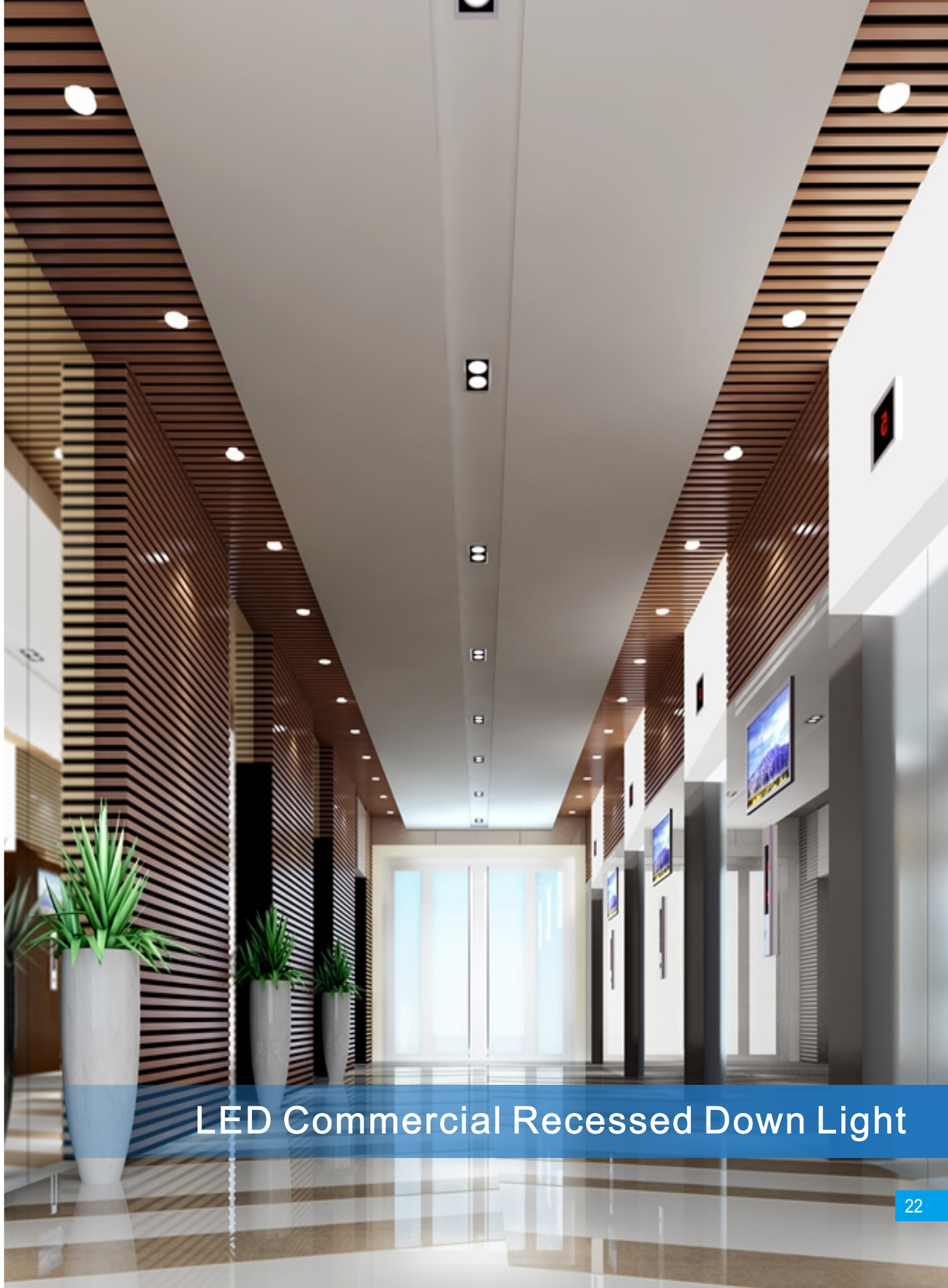

LED Commercial Recessed Down Light

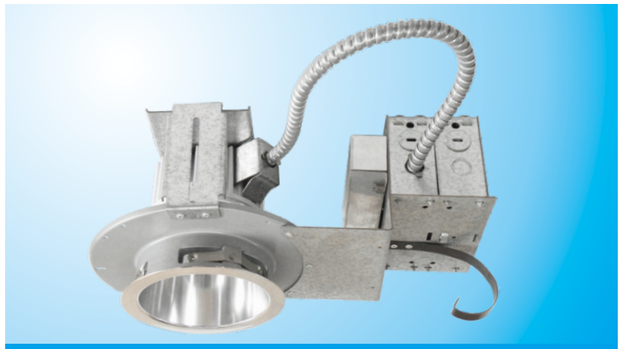

LED ARCHITECTURAL RECESSED DOWN LIGHT

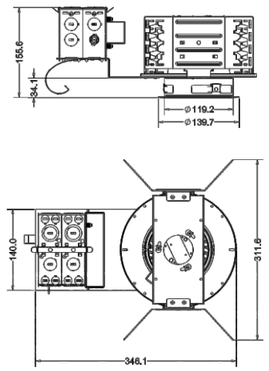

Features
- Uniquely Designed for New and Existing Construction
- Idea for Places Where Edison Base Sockets Have Been Banned
- Environment Friendly no Cd or Hg included
- Good Heat Dissipation More Safe to Use than LED Bulbs
- High CRI
- 50000 hours' life time
- LED Light Engine is attached to the die-cast heat sink and is easily replaceable and upgradable
- Energy Saving

Mounting
- Constructed from 16-gauge steel, die-formed construction for max heat dissipation and rust protection
- Precision tooled springs secure trim to mounting frame for effortless and tool-less installation frame for effortless and tool-less installation
- Compatible with C-channel, flat bar, wood joist bar hanger and EMT
- Fully assembled for ease of installation
- Non-IC housing require a minimum clearance of 3" around from thermal insulation and 1/2" from combustible material from above the fixture

Junction Box
- Pre-wired junction box provided with 1/2" and 3/4" knockouts, romex knockouts with pry-out slots and strain clamps
- Provided with removable access plates
- All leads are #18AWG wire, the ground wire connected to the bottom and quick connectors are supplied on all leads
- Through branch circuit wiring(4 in, 4 out)

Reflector
- High quality reflector with 1.2mm thickness available in multiple architectural finishes and types
- Gather light scattered by the LED chip and shape it into functional beams that minimize brightness and glare while eliminating lamp image
- Transmittance>90%
- Optional painted white flange is available

Durability
- Die-cast system pulls heat from the LED chip allowing continued cool operation for years
- LED output will be maintained at 70% if initial lumens at 50000 hours of operation

Thermal Protection
- Standard thermal protection device guards against improper installation and misuse of insulation material

LED Light Engine & Electronic System
- 120V/277V 50/60Hz input
- Less than 20% THD will be produced
- Power Factor>90%
- Thermally protected for additional safety
- Driver is installed on the junction box cover easy accessible for service from the ceiling
- Class 2 power supply
- Over voltage, over current and short circuit protection: Auto recovery
- Dims down to 10% with electronic low voltage (ELV) reverse phase control dimmers
- CRI>80%
- Color Temperature 2700K-6500K
- Cree, Citizen, Epistar all are available
- Wattage and Lumens for Choices

Input Power	Lumens
16W(+/-5%)	1280
10W(+/-5%)	800

Order Matrix

A	B	C	D	E	F	G

Item No.: AL4(R)-VA

A	Series
AL4(R)-VA	4" Vertical Architectural Housing LED

B	Options
C	C-channel Bar Hanger
F	Flat Bar Hanger
H	Wood Joist Bar Hanger

C	Input Voltage
	120V
277	277V
U	120-277V

D	Dimmable
	No Dimmable
DM	Dimmable

E	LED Available
Cree	Cree
Citizen	Citizen
Epistar	Epistar

F	Wattage
16	16W
10	10W

G	Color Temperature
27K	2700K
35K	3500K
50K	5000K
60K	6000K

Liteharbor Lighting Technology Co., Ltd.

www.liteharbor.com

LED ARCHITECTURAL RECESSED DOWN LIGHT

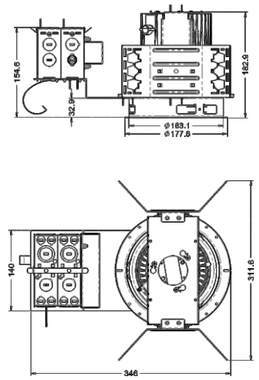

Features
- Uniquely Designed for New and Existing Construction
- Idea for Places Where Edison Base Sockets Have Been Banned
- Environment Friendly no Cd or Hg included
- Good Heat Dissipation More Safe to Use than LED Bulbs
- High CRI
- 50000 hours' life time
- LED Light Engine is attached to the die-cast heat sink and is easily replaceable and upgradable
- Energy Saving

Mounting
- Constructed from 16-gauge steel, die-formed construction for max heat dissipation and rust protection
- Precision tooled springs secure trim to mounting frame for effortless and tool-less installation frame for effortless and tool-less installation
- Compatible with C-channel, flat bar, wood joist bar hanger and EMT
- Fully assembled for ease of installation
- Non-IC housing require a minimum clearance of 3" around from thermal insulation and 1/2" from combustible material from above the fixture

Junction Box
- Pre-wired junction box provided with 1/2" and 3/4" knockouts, romex knockouts with pry-out slots and strain clamps
- Provided with removable access plates
- All leads are #18AWG wire, the ground wire connected to the bottom and quick connectors are supplied on all leads
- Through branch circuit wiring(4 in, 4 out)

Reflector
- High quality reflector with 1.2mm thickness available in multiple architectural finishes and types
- Gather light scattered by the LED chip and shape it into functional beams that minimize brightness and glare while eliminating lamp image
- Transmittance>90%
- Optional painted white flange is available

Durability
- Die-cast system pulls heat from the LED chip allowing continued cool operation for years
- LED output will be maintained at 70% if initial lumens at 50000 hours of operation

Thermal Protection
- Standard thermal protection device guards against improper installation and misuse of insulation material

LED Light Engine & Electronic System
- 120V/277V 50/60Hz input
- Less than 20% THD will be produced
- Power Factor>90%
- Thermally protected for additional safety
- Driver is installed on the junction box cover easy accessible for service from the ceiling
- Class 2 power supply
- Over voltage, over current and short circuit protection: Auto recovery
- Dims down to 10% with electronic low voltage (ELV) reverse phase control dimmers
- CRI>80%
- Color Temperature 2700K-6500K
- Cree, Citizen, Epistar all are available
- Wattage and Lumens for Choices

Input Power	Lumens
30W(+/-5%)	2500
24W(+/-5%)	1920
16W(+/-5%)	1280

Order Matrix

A	B	C	D	E	F	G

Item No.: AL6(R)-VA

A	Series
AL6(R)-VA	6" Vertical Architectural Housing LED

B	Options
C	C-channel Bar Hanger
F	Flat Bar Hanger
H	Wood Joist Bar Hanger

C	Input Voltage
	120V
277	277V
U	120-277V

D	Dimmable
	No Dimmable
DM	Dimmable

E	LED Available
Cree	Cree
Citizen	Citizen
Epistar	Epistar

F	Wattage
30	30W
24	24W
16	16W

G	Color Temperature
27K	2700K
35K	3500K
50K	5000K
60K	6000K

www.liteharbor.com

LED ARCHITECTURAL RECESSED DOWN LIGHT

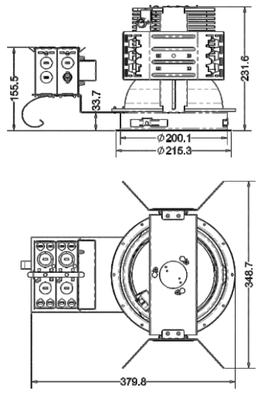

Features
- Uniquely Designed for New and Existing Construction
- Idea for Places Where Edison Base Sockets Have Been Banned
- Environment Friendly no Cd or Hg included
- Good Heat Dissipation More Safe to Use than LED Bulbs
- High CRI
- 50000 hours' life time
- LED Light Engine is attached to the die-cast heat sink and is easily replaceable and upgradable
- Energy Saving

Mounting
- Constructed from 16-gauge steel, die-formed construction for max heat dissipation and rust protection
- Precision tooled springs secure trim to mounting frame for effortless and tool-less installation frame for effortless and tool-less installation
- Compatible with C-channel, flat bar, wood joist bar hanger and EMT
- Fully assembled for ease of installation
- Non-IC housing require a minimum clearance of 3" around from thermal insulation and 1/2" from combustible material from above the fixture

Junction Box
- Pre-wired junction box provided with 1/2" and 3/4" knockouts, romex knockouts with pry-out slots and strain clamps
- Provided with removable access plates
- All leads are #18AWG wire, the ground wire connected to the bottom and quick connectors are supplied on all leads
- Through branch circuit wiring(4 in, 4 out)

Reflector
- High quality reflector with 1.2mm thickness available in multiple architectural finishes and types
- Gather light scattered by the LED chip and shape it into functional beams that minimize brightness and glare while eliminating lamp image
- Transmittance>90%
- Optional painted white flange is available

Durability
- Die-cast system pulls heat from the LED chip allowing continued cool operation for years
- LED output will be maintained at 70% if initial lumens at 50000 hours of operation

Thermal Protection
- Standard thermal protection device guards against improper installation and misuse of insulation material

LED Light Engine & Electronic System
- 120V/277V 50/60Hz input
- Less than 20% THD will be produced
- Power Factor>90%
- Thermally protected for additional safety
- Driver is installed on the junction box cover easy accessible for service from the ceiling
- Class 2 power supply
- Over voltage, over current and short circuit protection: Auto recovery
- Dims down to 10% with electronic low voltage (ELV) reverse phase control dimmers
- CRI>80%
- Color Temperature 2700K-6500K
- Cree, Citizen, Epistar all are available
- Wattage and Lumens for Choices

Input Power	Lumens
40W(+/-5%)	3200
30W(+/-5%)	2500
24W(+/-5%)	1920
16W(+/-5%)	1280

Order Matrix

A	B	C	D	E	F	G

Item No.: AL8(R)-VA

A	Series
AL8(R)-VA	8" Vertical Architectural Housing LED

B	Options
C	C-channel Bar Hanger
F	Flat Bar Hanger
H	Wood Joist Bar Hanger

C	Input Voltage
	120V
277	277V
U	120-277V

D	Dimmable
	No Dimmable
DM	Dimmable

E	LED Available
Cree	Cree
Citizen	Citizen
Epistar	Epistar

F	Wattage
40	40W
30	30W
24	24W
16	16W

G	Color Temperature
27K	2700K
35K	3500K
50K	5000K
60K	6000K

Multiple Lights

Featuring up to four independently controlled lamp configurations, Liteharbor Multiple Lights are available in multiple lamp sources including LED, low voltage, incandescent and metal halide. Liteharbor Multiple Lights luminaries provide a clean aesthetic look and are ideal for retail or commercial applications. Liteharbor Multiple Lights line also provides incredible flexibility with a range of options to choose from including energy efficient lamp sources and a trimless option for a clean architectural look. For the best in multiple lamp lighting system, Liteharbor Multiple Lights provides versatility and quality you can rely on

www.liteharbor.com

2-LAMP MULTIPLE LIGHT

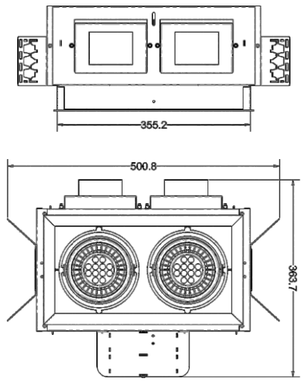

Description
- Easy Installation and maintenance
- All parts and components accessible from below the ceiling
- Lamp holders are adjustable 360° horizontal and 30° vertical for spot lighting in multiple directions
- Actual adjustment may vary depending on the lamp beam spread

Housing
- The inner trim is constructed of 22GA steel
- Finish can be black、white or silver
- Special finish please confirm with factory
- Internal wire bundles and locked and covered with a glass sleeve
- Junction box can be accessible from below the ceiling with a plate

Mounting Frame
- Can be accommodate a 1/2" to 1 1/4" ceiling thickness
- Channel bracket allow up to 5" vertical adjustable
- Universal mounting brackets included
- Compatible with C-channel, flat bar, and EMT
- C-channel are recommended for T-bar ceilings
- Bar hangers must be ordered separately

Flanged Trim
- Extruded trim frame includes torsion springs for convenient installations or removal from the housing

Trimless
- Optional mud frame available for trimless mounting
- The perforated mesh frame provided adheres to joint compound for seamless and trimless mounting

1)LED Light Engine
- 2800-6000k
- CRI>80%
- LED mounted to die-cast/extruded aluminum heat sink
- 50000 hours average rated life at 70% lumen

Electrical System
- 120-277V input
- Class 2 power supply
- Over voltage, over current and short circuit protection
- Auto recovery
- 10% dimmable is available 120V only
- 10/15/17.8/20W each lamp
- LM from 650-950 each lamp

2)**Metal Halide Lamp Optics**
- T4 GU6.5 20/39W each lamp
  Socket: GU6.5
  Integral electronic ballast with 120-277V input
  Ballast is accessible through ceiling opening via access door on housing wall
- CDM-Tm PGJ5 20/39W each lamp
  Socket: PGJ5
  Ballast is accessible through ceiling opening via access door on housing wall
- T6 G12 20/39/70W each lamp
  Socket: G12
  Ballast is accessible through ceiling opening via access door on housing wall
- T4.5 G8.5 20/39/70W each lamp
  Socket: G8.5
  Ballast is accessible through ceiling opening via access door on housing wall
- CMH MR16MH 20/39W
  Socket: GX10
  Ballast is accessible through ceiling opening via access door on housing wall
- PAR20MH 20/39W each lamp
  Socket: E26
  Ballast is accessible through ceiling opening via access door on housing wall

Order Matrix

A	B	C	D	E

Item No.: M2001

A	Series
M2001L	2 Lamp LED multiple light LED with COB
M2001	2 Lamp multiple light

B	Input
	120V
277	277V
U	120-277V

C	Lamp
T4	T4 GU6.5
CDM-Tm	CDM-Tm PGJ5
T6	T6 G12
T4.5	T4.5 G8.5
MR16	MR16
P20	PAR20
P30	PAR30
AR111	AR111

D	Light Source & Wattage
L15	LED 15W each lamp
L17.8	LED 17.8W each lamp
M20	Metal Halide 20W each lamp
M39	Metal Halide 39W each lamp
M70	Metal Halide 70W each lamp
50	Incandescent 50W

E	Color Temperature
28K	2800K
35K	3500K
50K	5000K
60K	6000K

Liteharbor Lighting Technology Co., Ltd.

www.liteharbor.com

- PAR30MH 39/70W each lamp
  Socket: E26
  Ballast is accessible through ceiling opening via access door on housing wall
- Cross louvers and filters /MR16 cross louver, snoot and filters available and filters available
  Must order separately

3)Other(Incandescent & LED)
- MR16 12V 50W max each lamp
  Socket: GU5.3
  Ballast is accessible through ceiling opening via access door on housing wall
- PAR20 50W max each lamp
  Socket: E26
  Ballast is accessible through ceiling opening via access door on housing wall
- Long neck PAR30 75W max each lamp
  Socket: E26
  Ballast is accessible through ceiling opening via access door on housing wall
- OSRAM AR111 each lamp
  LED 20W each lamp
  >80lm/w
  Ballast is accessible through ceiling opening via access door on housing wall
- Cross louvers and filters /MR16 cross louver, snoot and filters available
  Must order separately

MR16 / PAR20 / T4.5 G8.5 / T4 GU6.5 / CDM-Tm PGJ5

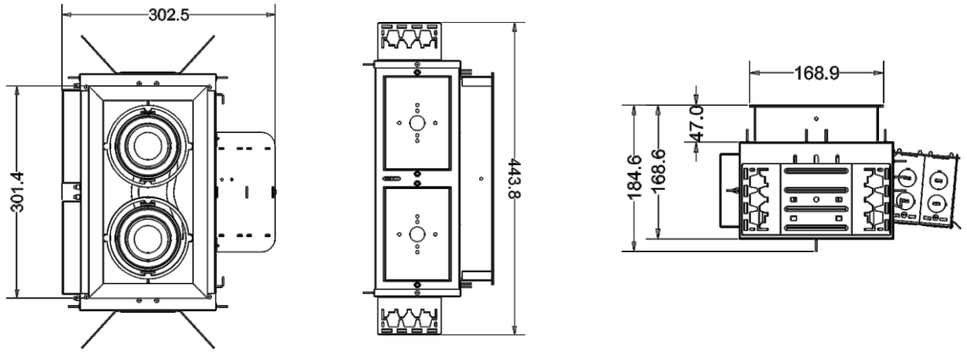

PAR30 / AR111 / T6 G12

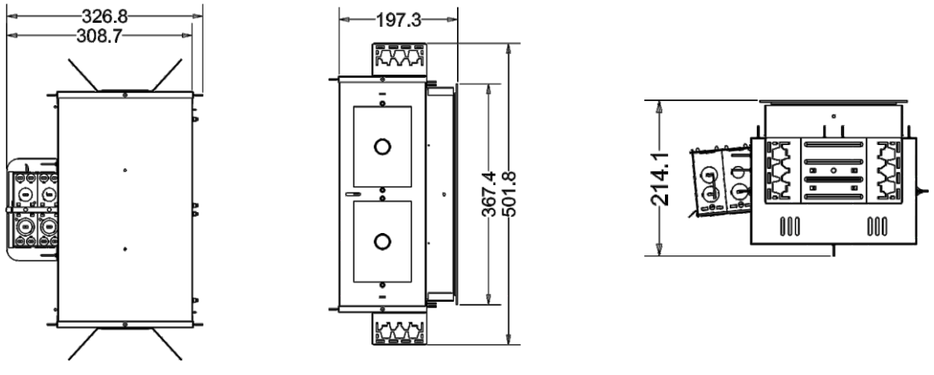

www.liteharbor.com

1-LAMP SQUARE MULTIPLE LIGHT

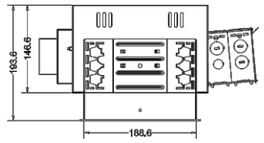

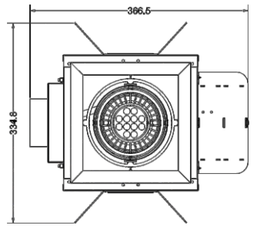

Description
- Easy Installation and maintenance
- All parts and components accessible from below the ceiling
- Lamp holders are adjustable 360° horizontal and 30° vertical for spot lighting in multiple directions
- Actual adjustment may vary depending on the lamp beam spread

Housing
- The inner trim is constructed of 22GA steel
- Finish can be black、white or silver
- Special finish please confirm with factory
- Internal wire bundles and locked and covered with a glass sleeve
- Junction box can be accessible from below the ceiling with a plate

Mounting Frame
- Can be accommodate a 1/2" to 1 1/4" ceiling thickness
- Channel bracket allow up to 5" vertical adjustable
- Universal mounting brackets included
- Compatible with C-channel, flat bar, and EMT
- C-channel are recommended for T-bar ceilings
- Bar hangers must be ordered separately

Flanged Trim
- Extruded trim frame includes torsion springs for convenient installations or removal from the housing

Trimless
- Optional mud frame available for trimless mounting
- The perforated mesh frame provided adheres to joint compound for seamless and trimless mounting

1)LED Light Engine
- 2800-6000k
- CRI>80%
- LED mounted to die-cast/extruded aluminum heat sink
- 50000 hours average rated life at 70% lumen

Electrical System
- 120-277V input
- Class 2 power supply
- Over voltage, over current and short circuit protection
- Auto recovery
- 10% dimmable is available 120V only
- 10/15/17.8/20W each lamp
- LM from 650-950 each lamp

2)Metal Halide Lamp Optics
- T4 GU6.5 20/39W each lamp
  Socket: GU6.5
  Integral electronic ballast with 120-277V input
  Ballast is accessible through ceiling opening via access door on housing wall
- CDM-Tm PGJ5 20/39W each lamp
  Socket: PGJ5
  Ballast is accessible through ceiling opening via access door on housing wall
- T6 G12 20/39/70W each lamp
  Socket: G12
  Ballast is accessible through ceiling opening via access door on housing wall
- T4.5 G8.5 20/39/70W each lamp
  Socket: G8.5
  Ballast is accessible through ceiling opening via access door on housing wall
- CMH MR16MH 20/39W
  Socket: GX10
  Ballast is accessible through ceiling opening via access door on housing wall

Order Matrix

A	B	C	D	E

Item No.: MS1001

A	Series
MS1001L	Square 1 Lamp LED multiple light LED with COB
MS1001	Square 1 Lamp multiple light

B	Input
	120V
277	277V
U	120-277V

C	Lamp
T4	T4 GU6.5
CDM-Tm	CDM-Tm PGJ5
T6	T6 G12
T4.5	T4.5 G8.5
MR16	MR16
P20	PAR20
P30	PAR30
AR111	AR111

D	Light Source & Wattage
L15	LED 15W each lamp
L17.8	LED 17.8W each lamp
M20	Metal Halide 20W each lamp
M39	Metal Halide 39W each lamp
M70	Metal Halide 70W each lamp
50	Incandescent 50W

E	Color Temperature
28K	2800K
35K	3500K
50K	5000K
60K	6000K

Liteharbor Lighting Technology Co., Ltd.

www.liteharbor.com

- PAR20MH 20/39W each lamp
  Socket: E26
  Ballast is accessible through ceiling opening via access door on housing wall
- PAR30MH 39/70W each lamp
  Socket: E26
  Ballast is accessible through ceiling opening via access door on housing wall
- Cross louvers and filters /MR16 cross louver, snoot and filters available and filters available
  Must order separately

3)Other(Incandescent & LED)
- MR16 12V 50W max each lamp
  Socket: GU5.3
  Ballast is accessible through ceiling opening via access door on housing wall
- PAR20 50W max each lamp
  Socket: E26
  Ballast is accessible through ceiling opening via access door on housing wall
- Long neck PAR30 75W max each lamp
  Socket: E26
  Ballast is accessible through ceiling opening via access door on housing wall
- OSRAM AR111 each lamp
- LED 20W each lamp
- >80lm/w
- Ballast is accessible through ceiling opening via access door on housing wall
- Cross louvers and filters /MR16 cross louver, snoot and filters available
  Must order separately

MR16 / PAR20 / T4.5 G8.5 / T4 GU6.5 / CDM-Tm PGJ5

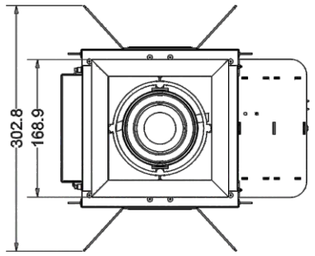

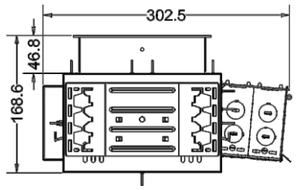

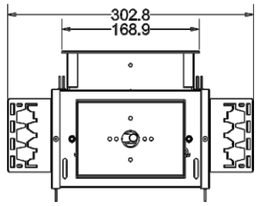

PAR30 / AR111 / T6 G12

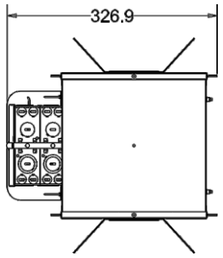

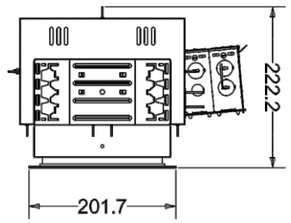

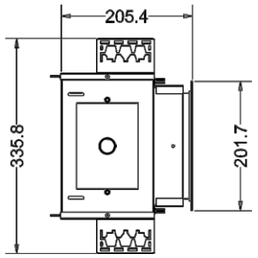

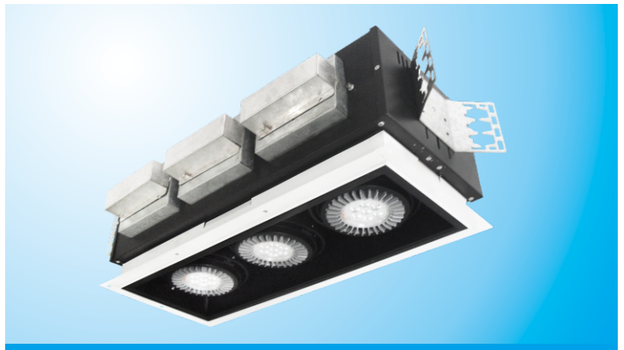

3-LAMP MULTIPLE LIGHT

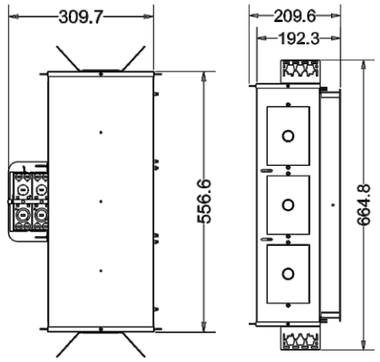

Description
- Easy Installation and maintenance
- All parts and components accessible from below the ceiling
- Lamp holders are adjustable 360° horizontal and 30° vertical for spot lighting in multiple directions
- Actual adjustment may vary depending on the lamp beam spread

Housing
- The inner trim is constructed of 22GA steel
- Finish can be black、white or silver
- Special finish please confirm with factory
- Internal wire bundles and locked and covered with a glass sleeve
- Junction box can be accessible from below the ceiling with a plate

Mounting Frame
- Can be accommodate a 1/2" to 1 1/4" ceiling thickness
- Channel bracket allow up to 5" vertical adjustable
- Universal mounting brackets included
- Compatible with C-channel, flat bar, and EMT
- C-channel are recommended for T-bar ceilings
- Bar hangers must be ordered separately

Flanged Trim
- Extruded trim frame includes torsion springs for convenient installations or removal from the housing

Trimless
- Optional mud frame available for trimless mounting
- The perforated mesh frame provided adheres to joint compound for seamless and trimless mounting

1)LED Light Engine
- 2800-6000k
- CRI>80%
- LED mounted to die-cast/extruded aluminum heat sink
- 50000 hours average rated life at 70% lumen

Electrical System
- 120-277V input
- Class 2 power supply
- Over voltage, over current and short circuit protection
- Auto recovery
- 10% dimmable is available 120V only
- 10/15/17.8/20W each lamp
- LM from 650-950 each lamp

2)Metal Halide Lamp Optics
- T4 GU6.5 20/39W each lamp
  Socket: GU6.5
  Integral electronic ballast with 120-277V input
  Ballast is accessible through ceiling opening via access door on housing wall
- CDM-Tm PGJ5 20/39W each lamp
  Socket: PGJ5
  Ballast is accessible through ceiling opening via access door on housing wall
- T6 G12 20/39/70W each lamp
  Socket: G12
  Ballast is accessible through ceiling opening via access door on housing wall
- T4.5 G8.5 20/39/70W each lamp
  Socket: G8.5
  Ballast is accessible through ceiling opening via access door on housing wall
- CMH MR16MH 20/39W
  Socket: GX10
  Ballast is accessible through ceiling opening via access door on housing wall

Order Matrix

A	B	C	D	E	F

Item No.: M3001

A	Series
M3001L	3 Lamp LED multiple light LED with COB
M3001	3 Lamp multiple light

B	Input
	120V
277	277V
U	120-277V

C	Lamp
T4	T4 GU6.5
CDM-Tm	CDM-Tm PGJ5
T6	T6 G12
T4.5	T4.5 G8.5
MR16	MR16
P20	PAR20
P30	PAR30
AR111	AR111

D	Light Source & Wattage
L15	LED 15W each lamp
L17.8	LED 17.8W each lamp
M20	Metal Halide 20W each lamp
M39	Metal Halide 39W each lamp
M70	Metal Halide 70W each lamp
50	Incandescent 50W

E	Color Temperature
28K	2800K
35K	3500K
50K	5000K
60K	6000K

Liteharbor Lighting Technology Co., Ltd.

www.liteharbor.com

- PAR20MH 20/39W each lamp
  Socket: E26
  Ballast is accessible through ceiling opening via access door on housing wall
- PAR30MH 39/70W each lamp
  Socket: E26
  Ballast is accessible through ceiling opening via access door on housing wall
- Cross louvers and filters /MR16 cross louver, snoot and filters available and filters available
  Must order separately

3)Other(Incandescent & LED)
- MR16 12V 50W max each lamp
  Socket: GU5.3
  Ballast is accessible through ceiling opening via access door on housing wall
- PAR20 50W max each lamp
  Socket: E26
  Ballast is accessible through ceiling opening via access door on housing wall
- Long neck PAR30 75W max each lamp
  Socket: E26
  Ballast is accessible through ceiling opening via access door on housing wall
- OSRAM AR111 each lamp
- LED 20W each lamp
- >80lm/w
- Ballast is accessible through ceiling opening via access door on housing wall
- Cross louvers and filters /MR16 cross louver, snoot and filters available
  Must order separately

MR16 / PAR20 / T4.5 G8.5 / T4 GU6.5 / CDM-Tm PGJ5

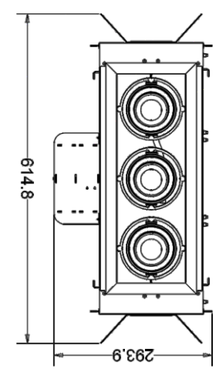

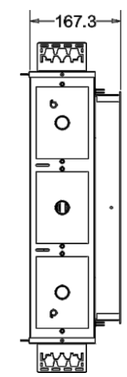

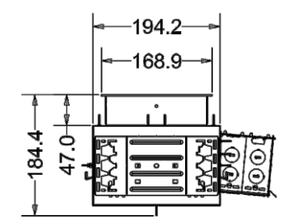

PAR30 / AR111 / T6 G12

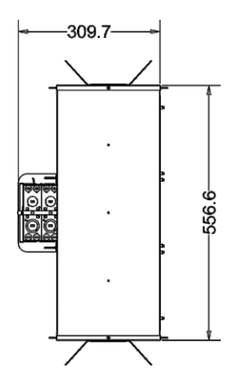

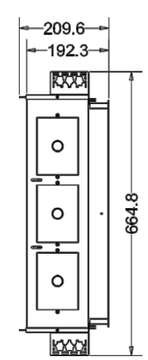

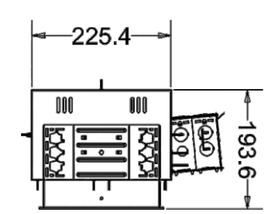

4-LAMP MULTIPLE LIGHT

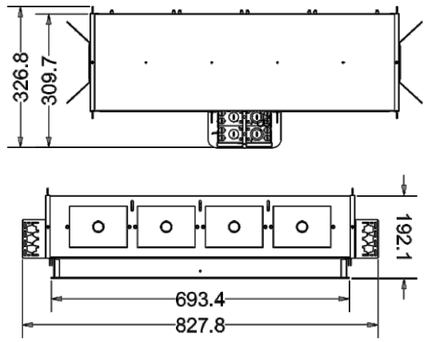

Description
- Easy Installation and maintenance
- All parts and components accessible from below the ceiling
- Lamp holders are adjustable 360° horizontal and 30° vertical for spot lighting in multiple directions
- Actual adjustment may vary depending on the lamp beam spread

Housing
- The inner trim is constructed of 22GA steel
- Finish can be black、white or silver
- Special finish please confirm with factory
- Internal wire bundles and locked and covered with a glass sleeve
- Junction box can be accessible from below the ceiling with a plate

Mounting Frame
- Can be accommodate a 1/2" to 1 1/4" ceiling thickness
- Channel bracket allow up to 5" vertical adjustable
- Universal mounting brackets included
- Compatible with C-channel, flat bar, and EMT
- C-channel are recommended for T-bar ceilings
- Bar hangers must be ordered separately

Flanged Trim
- Extruded trim frame includes torsion springs for convenient installations or removal from the housing

Trimless
- Optional mud frame available for trimless mounting
- The perforated mesh frame provided adheres to joint compound for seamless and trimless mounting

1)LED Light Engine
- 2800-6000k
- CRI>80%
- LED mounted to die-cast/extruded aluminum heat sink
- 50000 hours average rated life at 70% lumen

Electrical System
- 120-277V input
- Class 2 power supply
- Over voltage, over current and short circuit protection
- Auto recovery
- 10% dimmable is available 120V only
- 10/15/17.8/20W each lamp
- LM from 650-950 each lamp

2)**Metal Halide Lamp Optics**
- T4 GU6.5 20/39W each lamp
  Socket: GU6.5
  Integral electronic ballast with 120-277V input
  Ballast is accessible through ceiling opening via access door on housing wall
- CDM-Tm PGJ5 20/39W each lamp
  Socket: PGJ5
  Ballast is accessible through ceiling opening via access door on housing wall
- T6 G12 20/39/70W each lamp
  Socket: G12
  Ballast is accessible through ceiling opening via access door on housing wall
- T4.5 G8.5 20/39/70W each lamp
  Socket: G8.5
  Ballast is accessible through ceiling opening via access door on housing wall
- CMH MR16MH 20/39W
  Socket: GX10
  Ballast is accessible through ceiling opening via access door on housing wall

Order Matrix

A	B	C	D	E	F

Item No.: M4001

A	Series
M4001L	4 Lamp LED multiple light LED with COB
M4001	4 Lamp multiple light

B	Input
	120V
277	277V
U	120-277V

C	Lamp
T4	T4 GU6.5
CDM-Tm	CDM-Tm PGJ5
T6	T6 G12
T4.5	T4.5 G8.5
MR16	MR16
P20	PAR20
P30	PAR30
AR111	AR111

D	Light Source & Wattage
L15	LED 15W each lamp
L17.8	LED 17.8W each lamp
M20	Metal Halide 20W each lamp
M39	Metal Halide 39W each lamp
M70	Metal Halide 70W each lamp
50	Incandescent 50W

E	Color Temperature
28K	2800K
35K	3500K
50K	5000K
60K	6000K

Liteharbor Lighting Technology Co., Ltd.

www.liteharbor.com

- PAR20MH 20/39W each lamp
  Socket: E26
  Ballast is accessible through ceiling opening via access door on housing wall
- PAR30MH 39/70W each lamp
  Socket: E26
  Ballast is accessible through ceiling opening via access door on housing wall
- Cross louvers and filters /MR16 cross louver, snoot and filters available and filters available
  Must order separately

3)Other(Incandescent & LED)
- MR16 12V 50W max each lamp
  Socket: GU5.3
  Ballast is accessible through ceiling opening via access door on housing wall
- PAR20 50W max each lamp
  Socket: E26
  Ballast is accessible through ceiling opening via access door on housing wall
- Long neck PAR30 75W max each lamp
  Socket: E26
  Ballast is accessible through ceiling opening via access door on housing wall
- OSRAM AR111 each lamp
  LED 20W each lamp
  >80lm/w
  Ballast is accessible through ceiling opening via access door on housing wall
- Cross louvers and filters /MR16 cross louver, snoot and filters available
  Must order separately

MR16 / PAR20 / T4.5 G8.5 / T4 GU6.5 / CDM-Tm PGJ5

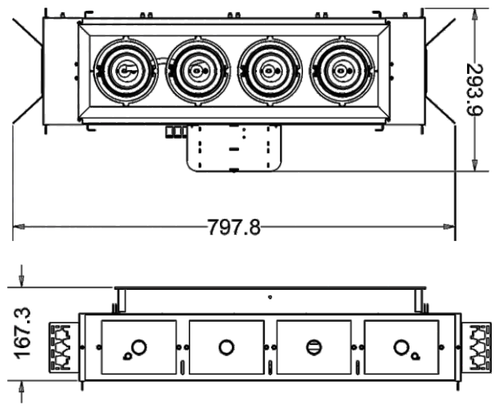

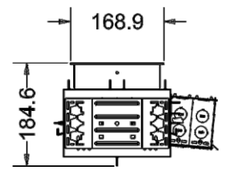

PAR30 / AR111 / T6 G12

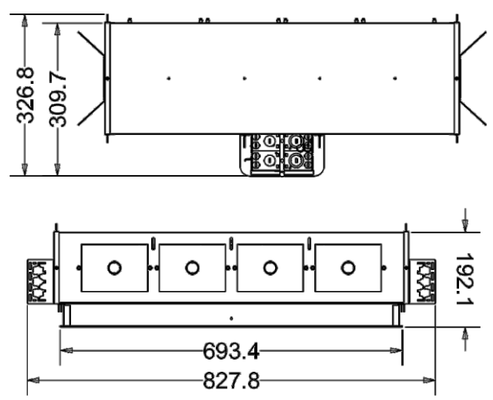

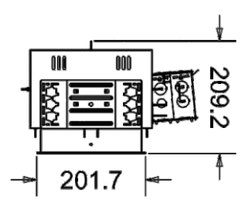

www.liteharbor.com

4-LAMP SQUARE MULTIPLE LIGHT

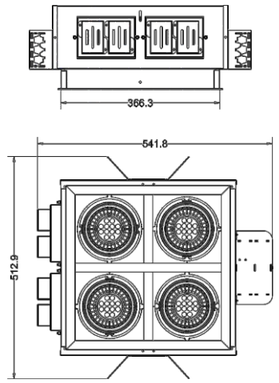

Description
- Easy Installation and maintenance
- All parts and components accessible from below the ceiling
- Lamp holders are adjustable 360° horizontal and 30° vertical for spot lighting in multiple directions
- Actual adjustment may vary depending on the lamp beam spread

Housing
- The inner trim is constructed of 22GA steel
- Finish can be black、white or silver
- Special finish please confirm with factory
- Internal wire bundles and locked and covered with a glass sleeve
- Junction box can be accessible from below the ceiling with a plate

Mounting Frame
- Can be accommodate a 1/2" to 1 1/4" ceiling thickness
- Channel bracket allow up to 5" vertical adjustable
- Universal mounting brackets included
- Compatible with C-channel, flat bar, and EMT
- C-channel are recommended for T-bar ceilings
- Bar hangers must be ordered separately

Flanged Trim
- Extruded trim frame includes torsion springs for convenient installations or removal from the housing

Trimless
- Optional mud frame available for trimless mounting
- The perforated mesh frame provided adheres to joint compound for seamless and trimless mounting

1)LED Light Engine
- 2800-6000k
- CRI>80%
- LED mounted to die-cast/extruded aluminum heat sink
- 50000 hours average rated life at 70% lumen

Electrical System
- 120-277V input
- Class 2 power supply
- Over voltage, over current and short circuit protection
- Auto recovery
- 10% dimmable is available 120V only
- 10/15/17.8/20W each lamp
- LM from 650-950 each lamp

2)Metal Halide Lamp Optics
- T4 GU6.5 20/39W each lamp
  Socket: GU6.5
  Integral electronic ballast with 120-277V input
  Ballast is accessible through ceiling opening via access door on housing wall
- CDM-Tm PGJ5 20/39W each lamp
  Socket: PGJ5
  Ballast is accessible through ceiling opening via access door on housing wall
- T6 G12 20/39/70W each lamp
  Socket: G12
  Ballast is accessible through ceiling opening via access door on housing wall
- T4.5 G8.5 20/39/70W each lamp
  Socket: G8.5
  Ballast is accessible through ceiling opening via access door on housing wall
- CMH MR16MH 20/39W
  Socket: GX10
  Ballast is accessible through ceiling opening via access door on housing wall

Order Matrix

A	B	C	D	E

Item No.: MS4001

A	Series
MS4001L	Square 4 Lamp LED multiple light LED with COB
MS4001	Square 4 Lamp multiple light

B	Input
	120V
277	277V
U	120-277V

C	Lamp
T4	T4 GU6.5
CDM-Tm	CDM-Tm PGJ5
T6	T6 G12
T4.5	T4.5 G8.5
MR16	MR16
P20	PAR20
P30	PAR30
AR111	AR111

D	Light Source & Wattage
L15	LED 15W each lamp
L17.8	LED 17.8W each lamp
M20	Metal Halide 20W each lamp
M39	Metal Halide 39W each lamp
M70	Metal Halide 70W each lamp
50	Incandescent 50W

E	Color Temperature
28K	2800K
35K	3500K
50K	5000K
60K	6000K

Liteharbor Lighting Technology Co., Ltd.

www.liteharbor.com

- PAR20MH 20/39W each lamp
  Socket: E26
  Ballast is accessible through ceiling opening via access door on housing wall
- PAR30MH 39/70W each lamp
  Socket: E26
  Ballast is accessible through ceiling opening via access door on housing wall
- Cross louvers and filters /MR16 cross louver, snoot and filters available and filters available
  Must order separately

3)Other(Incandescent & LED)
- MR16 12V 50W max each lamp
  Socket: GU5.3
  Ballast is accessible through ceiling opening via access door on housing wall
- PAR20 50W max each lamp
  Socket: E26
  Ballast is accessible through ceiling opening via access door on housing wall
- Long neck PAR30 75W max each lamp
  Socket: E26
  Ballast is accessible through ceiling opening via access door on housing wall
- OSRAM AR111 each lamp
- LED 20W each lamp
- >80lm/w
- Ballast is accessible through ceiling opening via access door on housing wall
- Cross louvers and filters /MR16 cross louver, snoot and filters available
  Must order separately

MR16 / PAR20 / T4.5 G8.5 / T4 GU6.5 / CDM-Tm PGJ5

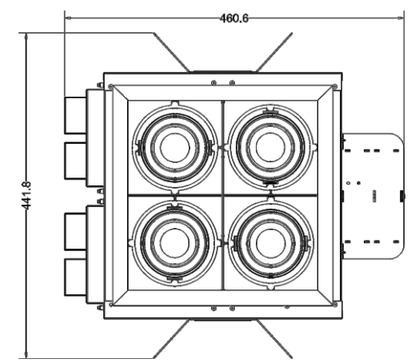

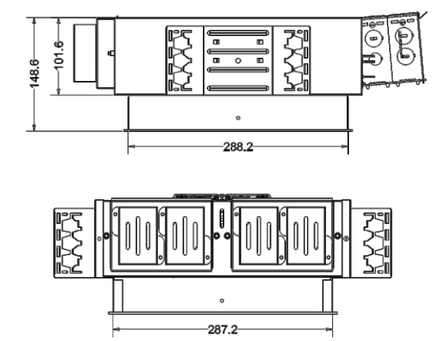

PAR30 / AR111 / T6 G12

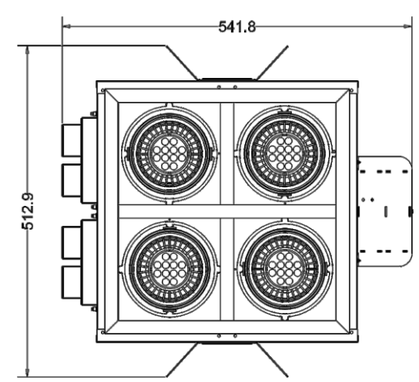

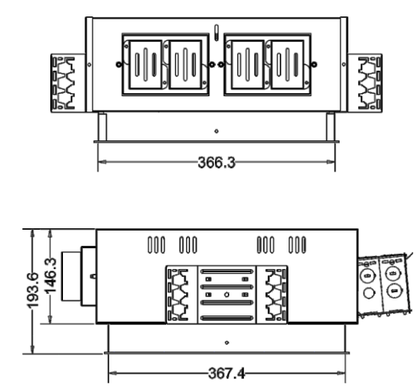

Exit & Emergency Light

Liteharbor Lighting Now Offers A Variety of Exit & Emergency Lights That Are Very Popular in North America. Liteharbor Exit & Emergency Lights Are Extremely Versatile, They Come in Multiple Sizes and Are Available in Incandescent and LED to suit a variety of applications, Our LED Exit & Emergency Lights Feature Designs Not Only Bring You Eye Enjoying But Also Can Withstand the Toughest of Elements. Liteharbor Lighting Exit & Emergency Light Require Minimum Maintenance and Offer Up to 50000 Hours of Operation. For The Best in Exit & Emergency Light System, Liteharbor Exit & Emergency Light Provides Versatility and Quality You Can Rely On.

Liteharbor Lighting Technology Co., Ltd.

LED Exit & Emergency Light

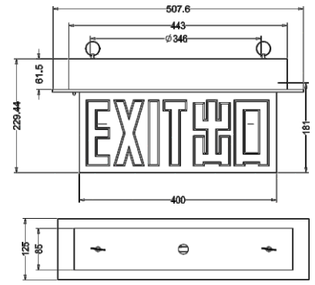

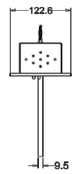

Order Matrix

A	B	C	D	E	F

Item No.: EX009L

A	Series
EX009L	Exit Sign

B	Input Voltage
	120V
277	277V
U	120-277V

C	Battery
	Battery Backup
AC	AC Only No battery

D	Letter Colour
G	Green
R	Red

E	Face
S	Single
D	Double

F	Mounting
SM	Surface Mounted
RM	Recessed Mounted
PM	Pedant Mounted

Description
- Universal Single or Double Face
- Energy Saving LED Lamps
- Heavy Duty 20 Gauge Steel Housing
- Durable White Powder Coated Finish Other Finish Please Consult Factory
- Etched, clear acrylic edge-lite face plate
- Universally Surface Mounted, Recessed Mounted Pendant Mounted All Are Available
- Red or Green Letter Colors

Electrical
- Dual Voltage Input 110-277VAC 60Hz
- Solid-State Voltage Limited Charger
- Solid-state Switching
- Brownout Circuit
- Low Voltage Disconnected
- Overload/Short Circuit Protection
- Test Switch/Power Indicator Light

Battery
- Sealed Nickel Cadmium (Self-Powered exits only)
- Maintenance-Free, Long Life
- Full Recharge Time 24 Hours (max)
- 3.6V

Lamp Date
- AC LED: Long Life LED Lamps Provide Uniform Diffused Illumination' 2.5W, AC
- DC: LED Lamps 3W 3.6VDC

Warranty
- EXIT: 2-Year
- Battery: 15 Year Pro-rata

LED Exit & Emergency Light

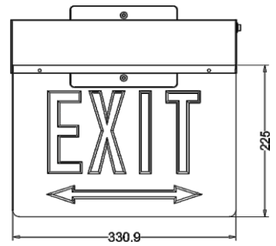

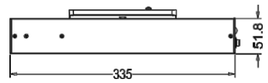

Order Matrix

A	B	C	D	E	F	G

Item No.: EX010L

A	Series
EX010L	Exit sign

B	Input Voltage
	120V
277	277V
U	120-277V

C	Battery
	Battery Backup
AC	AC Only

D	Letter Colour
G	Green
R	Red

E	Face
S	Single
D	Double

F	Arrow
N	No
LA	Left
RA	Right
LR	Double

G	State Style
CHI	Chicago Style
NY	New York Style
	Other confirm with us

Description
- Universal Single or Double Face
- Energy Saving LED Lamps
- Aluminum Housing
- Clear Acrylic Face Plate
- Direction of Narrow Can Be Done As Customers' Needs
- Universally Surface Mounted, Ceiling, Wall or End
- Universal J-box Mounting Pattern
- Red or Green Letter Colors
- Die-cast Canopy Provided

Code Compliance
- UL 924 Listed
- Most State and Local Codes

Electrical
- Dual Voltage Input 110-277VAC 60Hz
- Solid-State Voltage Limited Charger
- Solid-state Switching
- Brownout Circuit
- Low Voltage Disconnected
- Overload/Short Circuit Protection
- Test Switch/Power Indicator Light

Battery
- Sealed Nickel Cadmium (Self-Powered exits only)
- Maintenance-Free, Long Life
- Full Recharge Time 24 Hours (max)
- 3.6V

Lamp Date
- AC LED: Long Life LED Lamps Provide Uniform Diffused Illumination
  120V, Input: 4.2W, Output: 0.7W, 90 Minutes Emergency Time 0.045A, LM>50
  277V, Input: 4.2W, Output: 0.7W, 90 Minutes Emergency Time 0.019A, LM>50
- DC: LED Lamps

Warranty
- EXIT: 2-Year
- Battery: 15 Year Pro-rata

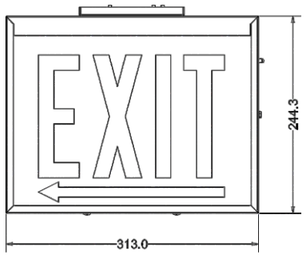

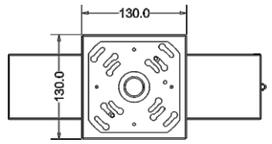

Order Matrix

A B C D E F G

Item No.: EX011L

A	Series
EX011L	Exit Sign

B	Input Voltage
	120V
277	277V
U	120-277V

C	Battery
	Battery Backup
AC	AC Only

D	Letter Colour
G	Green
R	Red

E	Face
S	Single
D	Double

F	Arrow
N	No
LA	Left
RA	Right
LR	Double

G	State Style
CHI	Chicago Style
NY	New York Style
	Other confirm with us

Description
- Universal Single or Double Face
- Energy Saving LED Lamps
- Heavy Duty 20 Gauge Steel Housing
- Durable White Powder Coated Finish Other Finish Please Consult Factory
- Other State Styles Are Also Available
- Universally Surface Mounted, Ceiling , Wall or End
- Universal J-box Mounting Pattern
- Red or Green Letter Colors

Code Compliance
- UL 924 Listed
- Most State and Local Codes

Electrical
- Dual Voltage Input 120/277V AC 60Hz
- Solid-State Voltage Limited Charger
- Solid-state Switching
- Brownout Circuit
- Low Voltage Disconnected
- Overload/Short Circuit Protection
- Test Switch/Power Indicator Light

Battery
- Sealed Nickel Cadmium (Self-Powered exits only)
- Maintenance-Free, Long Life
- Full Recharge Time 24 Hours (max)
- 3.6V

Lamp Date
- AC LED: Long Life LED Lamps Provide Uniform Diffused Illumination
  120V, Input: 7W, Output: 1.8W, 90 Minutes Emergency Time 0.077A, LM>50
  277V, Input: 7W, Output: 1.8W, 90 Minutes Emergency Time, 0.033A, LM>50
- DC: LED Lamps

Warranty
- EXIT: 2-Year
- Battery: 15 Year Pro-rata

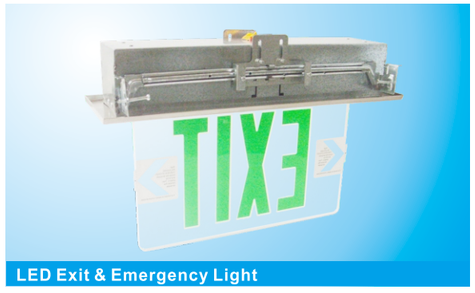

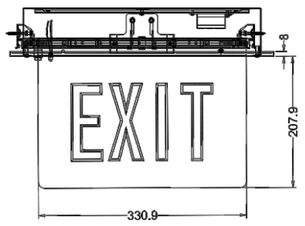

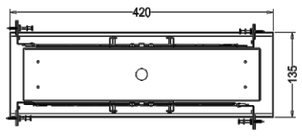

Order Matrix

A B C D E F G

Item No.: EX012L

A	Series
EX012L	Exit sign

B	Input Voltage
	120V
277	277V
U	120-277V

C	Battery
	Battery Backup
AC	AC Only

D	Letter Colour
G	Green
R	Red

E	Face
S	Single
D	Double

F	Arrow
N	No
LA	Left
RA	Right
LR	Double

G	State Style
CHI	Chicago Style
NY	New York Style
	Other confirm with us

Description
- Universal Single or Double Face
- Energy Saving LED Lamps
- Aluminum Housing
- Clear Acrylic Face Plate
- Direction of Narrow Can Be Done As Customers' Needs
- Recessed Mounted
- Universal J-box Mounting Pattern
- Red or Green Letter Colors

Code Compliance
- UL 924 Listed
- Most State and Local Codes

Electrical
- Dual Voltage Input 110-277VAC 60Hz
- Solid-State Voltage Limited Charger
- Solid-state Switching
- Brownout Circuit
- Low Voltage Disconnected
- Overload/Short Circuit Protection
- Test Switch/Power Indicator Light

Battery
- Sealed Nickel Cadmium (Self-Powered exits only)
- Maintenance-Free, Long Life
- Full Recharge Time 24 Hours (max)
- 3.6V

Lamp Date
- AC LED: Long Life LED Lamps Provide Uniform Diffused Illumination
  120V, Input: 4.2W, Output: 0.7W, 90 Minutes Emergency Time, 0.045A, LM>50
  277V, Input: 4.2W, Output: 0.7W, 90 Minutes Emergency Time, 0.019A, LM>50
- DC: LED Lamps

Warranty
- EXIT: 2-Year
- Battery: 15 Year Pro-rata

Liteharbor Lighting Technology Co., Ltd.

www.liteharbor.com

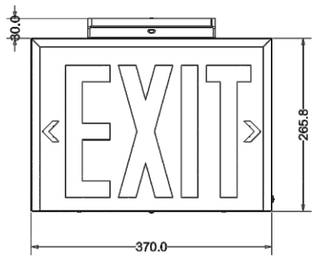

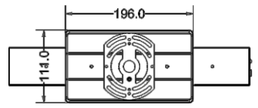

Order Matrix

A B C D E F

Item No.: EX013L

A	Series
EX013L	Exit Sign

B	Input Voltage
	120V
277	277V
U	120-277V

C	Battery
	Battery Backup
AC	AC Only No battery

D	Letter Colour
G	Green
R	Red

E	Face
S	Single
D	Double

F	State Style
CHI	Chicago Style
NY	New York Style
	Other confirm with us

Description
- Universal Single or Double Face
- Energy Saving LED Lamps
- Heavy Duty 20 Gauge Steel Housing
- Durable White Powder Coated Finish Other Finish Please Consult Factory
- Other State Styles Are Also Available
- Universally Surface Mounted, Ceiling, Wall or End
- Universal J-box Mounting Pattern
- Red or Green Letter Colors

Code Compliance
- UL 924 Listed
- Most State and Local Codes

Electrical
- Dual Voltage Input 120/277VAC 60Hz
- Solid-State Voltage Limited Charger
- Solid-state Switching
- Brownout Circuit
- Low Voltage Disconnected
- Overload/Short Circuit Protection
- Test Switch/Power Indicator Light

Battery
- Sealed Nickel Cadmium (Self-Powered exits only)
- Maintenance-Free, Long Life
- Full Recharge Time 24 Hours (max)
- 3.6V

Lamp Date
- AC LED: Long Life LED Lamps Provide Uniform Diffused Illumination
- DC: LED Lamps

Warranty
- EXIT: 2-Year
- Battery: 15 Year Pro-rata

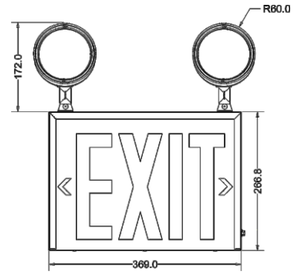

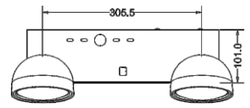

Order Matrix

A B C D E F G

Item No.: XM206L

A	Series
XM206L	Exit sign

B	Input Voltage
	120V
277	277V
U	120-277V

C	Battery
	Battery Backup
AC	AC Only No battery

D	Letter Colour
G	Green
R	Red

E	Face
S	Single
D	Double

F	State Style
CHI	Chicago Style
NY	New York Style
	Other confirm with us

G	Lamp Head
2	2 Heads
3	3 Heads

Description
- Bright 9 Watt Long Life Lamps Three Heads
- Energy Saving LED Lamps
- Heavy Duty 20 Gauge Steel Housing
- Durable White Powder Coated Finish Other Finish Please Consult Factory
- Other State Style Are Also Available
- Universally Surface Mounted, Ceiling , Wall or End
- Universal J-box Mounting Pattern
- Red or Green Letter Colors

Code Compliance
- UL 924 Listed
- Most State and Local Codes

Electrical
- Dual Voltage Input 120/277VAC 60Hz
- Solid-State Voltage Limited Charger
- Solid-state Switching
- Brownout Circuit
- Low Voltage Disconnected
- Overload/Short Circuit Protection
- Test Switch/Power Indicator Light

Battery
- Sealed Nickel Cadmium (Self-Powered exits only)
- Maintenance-Free, Long Life
- Full Recharge Time 24 Hours (max)
- Rechargeable 6V

Lamp Date
- AC LED: Long Life LED Lamps Provide Uniform Diffused Illumination
- DC: LED Lamps

Warranty
- EXIT: 2-Year
- Battery: 15 Year Pro-rata

www.liteharbor.com

LED EMERGENCY & EXIT LIGHT

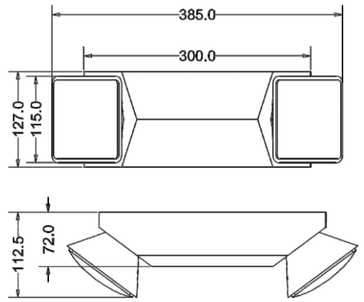

Order Matrix

A B C D E

Item No.: EM203L

A	Series
EM203L	Emergency Light

B	Input Voltage
	120V
277	277V
U	120-277V

C	Battery
	Battery Backup
AC	AC Only No battery

D	Finish
W	White
B	Black
SV	Silver

E	State Style
CHI	Chicago Style
NY	New York Style
	Other confirm with us

Description
- Completely self-contained, fully automatic operation
- Compact low-profile design in neutral finish
- Universal mounting plate w/Quick Connect for rapid installation
- Push-to-test switch
- 6 volt. Pure lead maintenance-free battery
- Environmentally coated solid state charger
- Automatic low voltage disconnect (LVD)
- Universal transformer for 120 or 277V AC
- V-O flame retardant, high-impact thermoplastic housing
- Charge rate/power-on LED indicator light
- Damp location listed
- Operation time-90 minutes
- Lamp-2×5.4W

Housing Color
- White, Black, Silver

Battery
- NI-Cd battery, Maintenance-free, Long-Life
- Full Recharge Time is 24hrs (max.)

Listing
- c-UL-us listed

Warranty
- 2 years limited warranty

LED Exit & Emergency Light

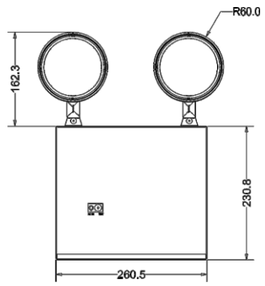

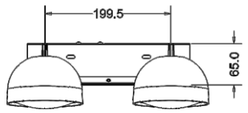

Order Matrix

A B C D E

Item No.: EM212L

A	Series
EM212L	Emergency Light

B	Input Voltage
	120V
277	277V
U	120-277V

C	Battery
	Battery Backup
AC	AC Only No battery

D	Finish
W	White
B	Black
SV	Silver

E	State Style
CHI	Chicago Style
NY	New York Style
	Other confirm with us

Description
- Bright 9 Watt Long Life Lamps
- Energy Saving LED Lamps
- Heavy Duty 20 Gauge Steel Housing
- Durable White Powder Coated Finish Other Finish Please Consult Factory
- New York Style Other State Style Also Are Available
- Other State Styles Are Also Available
- Universally Surface Mounted, Ceiling, Wall or End
- Universal J-box Mounting Pattern

Code Compliance
- UL 924 Listed
- Most State and Local Codes

Lamp Date
- AC LED: Long Life LED Lamps Provide Uniform Diffused Illumination
- DC: LED Lamps

Warranty
- EXIT: 2-Year
- Battery: 15 Year Pro-rata

Electrical
- Dual Voltage Input 120/277VAC 60Hz
- Solid-State Voltage Limited Charger
- Solid-state Switching
- Brownout Circuit
- Low Voltage Disconnected
- Overload/Short Circuit Protection
- Test Switch/Power Indicator Light

Battery
- Lead-acid storage battery
- Maintenance-Free, Long Life
- Full Recharge Time 24 Hours (max)
- Rechargeable 6V

TRACK LINGTING

www.liteharbor.com

Line Voltage 360 Degree Rotation AR111

- Finish：White/Black/Silver/Satin Nickel
- Lamp: AR111 150W max

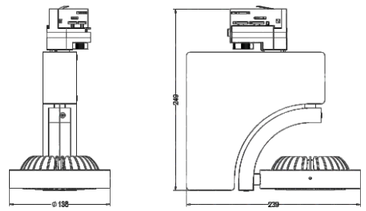

Line Voltage Two Heads AR111

- Finish：White/Black/Silver/Satin Nickel
- Lamp: AR111 150W max

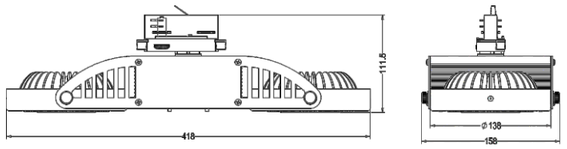

Line Voltage 80mm One Head New LED Track Lighting

- Finish：White/Black/Silver/Satin Nickel
- Lamp: COB LED 30W max
- Beam Angle: 22/44 degree

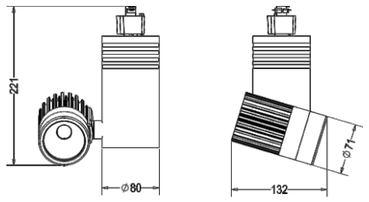

Line Voltage 80mm Two Heads New LED Track Lighting

- Finish：White/Black/Silver/Satin Nickel
- Lamp: COB LED 60W max
- Beam Angle: 22/44 degree

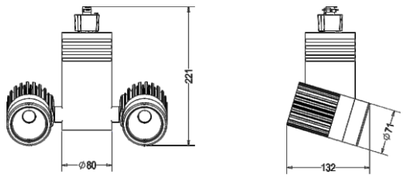

Liteharbor Lighting Technology Co., Ltd.

www.liteharbor.com

Line Voltage 55mm Two Heads New LED Track Lighting

- Finish：White/Black/Silver/Satin Nickel
- Lamp: COB LED 60W max
- Beam Angle: 22/44 degree

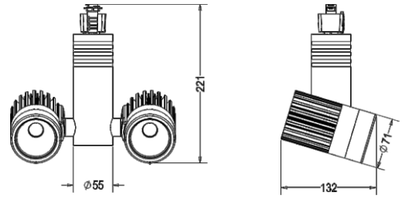

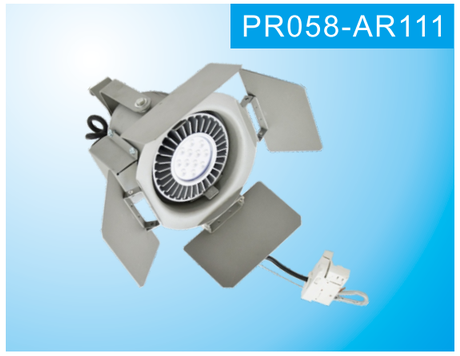

Line Voltage Four Barn Doors AR111 Track Lighting

- Finish：White/Black/Silver/Satin Nickel
- Lamp: AR111 150W max

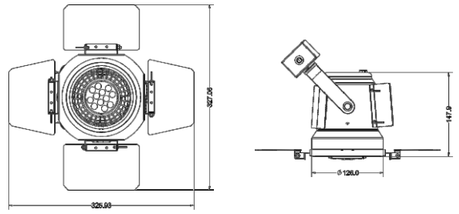

Line Voltage Four Barn Doors AR111 Ceiling Mounted Track Lighting
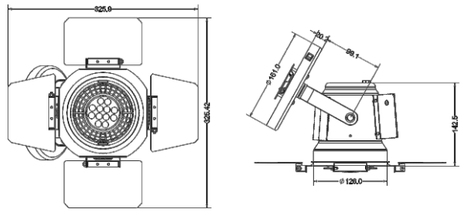
- Finish：White/Black/Silver/Satin Nickel
- Lamp: AR111 150W max