Liteharbor®
Lighting Technology

www.liteharbor.com

Recessed downlight Leader
China Manufacturer

Liteharbor,Harbor of Light!

EDITION V3

Company Profile

Liteharbor mission is to be the premier source of lighting fixtures and products for customers in a wide variety of residential, commercial and industrial settings. To achieve this ambitious goal, Liteharbor Lighting constantly strives for the highest standards of excellence in customer service.

Our unwavering commitment to service and quality has made Liteharbor Lighting one of the world's leading suppliers of lighting fixtures.

From its inception, Liteharbor Lighting has energetically applied its wealth of human, aesthetic, and technical resources to satisfy the rigorous standards and demanding expectations of professional builders and architects. The meticulous care that we have taken to learn about the sciences of architecture and lighting, combined with our relentless quest for perfection in product quality and performance, has enabled Liteharbor Lighting to maintain an edge over its competitors and repeatedly earn the privilege to serve customers in an extensive array of architectural settings.

Listening to our customers, keeping abreast of the latest developments in our industry, abreast of the latest developments in our industry and constantly implementing improvements in our industry-these are some of the ways we have continued our preeminence in the industry.

We Are The One
A experienced manufacturer with 10-year experiences in lighting.
A powerful manufacturer has the most complete product lines cover all kinds of indoor and outdoor lights.
A professional manufacturer provide full lighting solutions.
A reliable manufacturer with full quality control system, customer satisfy Liteharbor forever pursue.
Leader manufacturer of recessed downlights in China, Liteharbor warmly welcome your joining!

TABLE OF CONTENTS

LED DOWNLIGHT WALL WASHER 05–06

LED DOWNLIGHT EYEBALL 07–08

LED DOWNLIGHT MODULE 09–10

LED DOWNLIGHT REFLECTOR HARDWIRE 11–14

HIGH LUMEN ARCHITECTURAL DOWNLIGHT 15–17

COB ADJUSTABLE MULTIPLE DOWNLIGHT 18–19

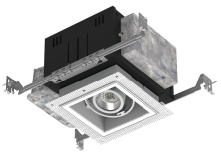

RGBW MULTIPLE DOWNLIGHT 21

COB MULTIPLE DOWNLIGHT 22

TRACK LIGHTING 23–25

IDEAL FOR A
BROAD RANGE OF APPLICATIONS

Recessed LED Downlight Series
Recessed LED downlight with integral power supply, designed for using with compatible Liteharbor Lighting new construction or remodel housings. Retrofit accessories available for use with existing Liteharbor Lighting recessed housings, suit for IC or NON-IC type.

COB Adjustable Multiple Downlight Series
Liteharbor COB Adjustable Multiple Downlight can feature up to four independently controlled lamp configurations, provides a clean aesthetic look and is ideal for retail or commercial applications. All lamp holders are adjustable 360° horizontal and 30° vertical for spot lighting in multiple directions. They also offered in trimmed or trimless and 1, 2, 3, or 4 lamp configurations.

RGBW Multiple Downlight Borealis Series
Add colors to your life! Would you want to change color with your different mood? BOREALIS Series bring you different day you want! Outstanding 360 degree pivoting floating head design, available white and black finish. Due to its 40 Watt RGBW all in one chip, BOREALIS is capable of producing over 9 million colors including all the white patterns: From 1,800K to 8,000K, making it the ONLY downlight ever needed for the future homes of today!

COB Multiple Downlight Series
The new family of Liteharbor LED recessed multiples represent the next generation in multi-head accent lighting. Featuring a completely new frame-in design, the LED multiple is available with trim and trimless options. The Multiple series is offered with a new construction frame featuring a slim 4" width aperture in 1, 2, 3, or 4 lamp configurations and a 10"x10" square. LED recessed multiples feature a new set of custom optics designed for performance and efficiency. At 14W per head, LED Multiples delivers more than 1000lm making it an ideal alternative to 20W ceramic metal halide.

LED Track Lighting Series
Charming constructed with high quality architectural grade die-cast aluminum, the LED accent series offers long-lasting and energy-saving LED lighting. Guaranteed color consistency and control creates optimal performance with every fixture. Precision optics is uniquely constructed to intentionally regress to the position of the LED array. It provides the best possible shielding and glare control while delivering crisp, bright light. Multiple accessories are also available for further control.

LED Retrofit Downlight

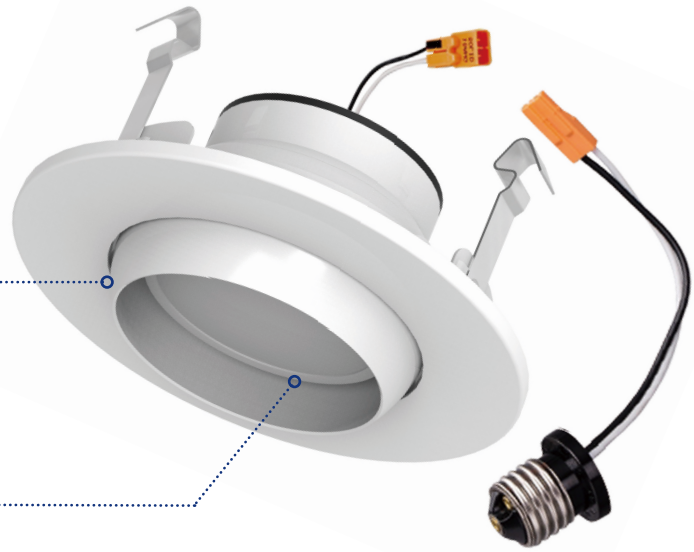

Thermally conductive eyeball housing provides uninterrupted heat transfer to ensure long life of the LED. Allows for 30° vertical adjustment

LED array integrated to one piece high purity aluminum, a high transmission diffusing lens conceals the LEDs

4" LED DOWNLIGHT WALL WASHER RETROFIT

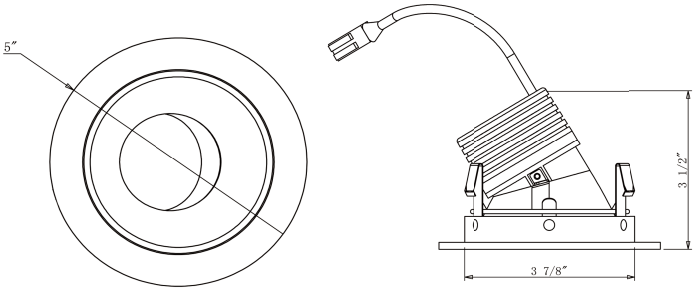

ORDER MATRIX | Example: BWL4001-ND120-P-700-30K

A	B	C	D	E

A	Series
BWL4001	4" LED Downlight Wall Washer

B	Power Supply
ND120	Non-Dimming 120V
ND277	Non-Dimming 277V
D120	0-10V Dimming 120V
D277	0-10V Dimming 277V

C	Available Chips
P	Philips
R	Cree
E	Epistar
S	Seoul
O	Osram

D	Lumen Output
700	700 Lumen
950	950 Lumen

E	Color Temperature
30K	3000K
40K	4000K
50K	5000K

Description:

- All-in-one LED retrofit wall washer trim designed to use with Liteharbor 4 inch recessed residential downlights
- Provide 50000 hours of life at 70% lumen maintenance
- No lead or mercury
- Trim shipped with a medium base socket adapter whip

LED Light Engine:

- Cree true white® technology available
- CRI>80%
- Color temperature 3000K-5000K
- Rated for 50000 hours at 70% lumen output
- No heat, mercury or UV

Driver:

- Dedicated 120 volt driver
- Power factor >0.9
- Dimmable with the use of most incandescent, magnetic low voltage and electronic low voltage wall box dimmers
- Rated for 50 to 60Hz at 120V/277V input
- Produces less than 20% THD

Input Power	Lumens
9W	700LM
12W	950LM

Listing & Warranty:

- ETL listed to US and Canadian standards for wet locations
- 5-Year Limited Warranty

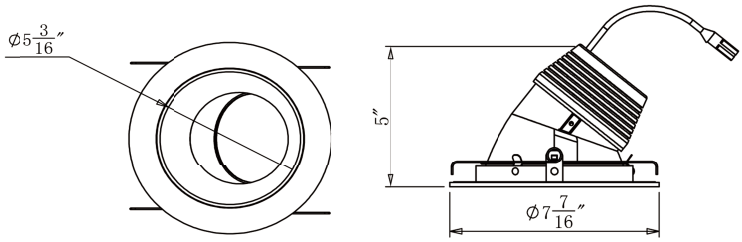

ORDER MATRIX | Example: BWL6001-ND120-P-1100-30K

A **B** **C** **D** **E**

A	Series
BWL6001	6" LED Downlight Wall Washer

B	Power Supply
ND120	Non-Dimming 120V
ND277	Non-Dimming 277V
D120	0-10V Dimming 120V
D277	0-10V Dimming 277V

C	Available Chips
P	Philips
R	Cree
E	Epistar
S	Seoul
O	Osram

D	Lumen Output
1100	1100 Lumen
1400	1400 Lumen

E	Color Temperature
30K	3000K
40K	4000K
50K	5000K

Description:

- All-in-one LED retrofit wall washer trim designed to use with Liteharbor 6 inch recessed residential downlights
- Provide 50000 hours of life at 70% lumen maintenance
- No lead or mercury
- Trim shipped with a medium base socket adapter whip

LED Light Engine:

- Cree true white® technology available
- CRI>80%
- Color temperature 3000K-5000K
- Rated for 50000 hours at 70% lumen output
- No heat, mercury or UV

Driver:

- Dedicated 120 volt driver
- Power factor >0.9
- Dimmable with the use of most incandescent, magnetic low voltage and electronic low voltage wall box dimmers
- Rated for 50 to 60Hz at 120V/277V input
- Produces less than 20% THD

Input Power	Lumens
14W	1100LM
18W	1400LM

Listing & Warranty:

- ETL listed to US and Canadian standards for wet locations
- 5-Year Limited Warranty

4" LED DOWNLIGHT EYEBALL RETROFIT

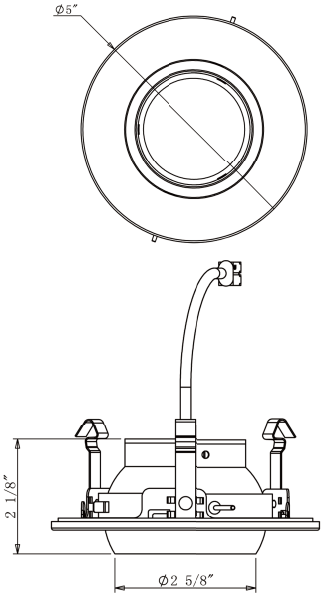

ORDER MATRIX | Example: BEL4001-ND120-P-700-30K

A **B** **C** **D** **E**

A	Series
BEL4001	4" LED Downlight Eyeball

B	Power Supply
ND120	Non-Dimming 120V
ND277	Non-Dimming 277V
D120	0-10V Dimming 120V
D277	0-10V Dimming 277V

C	Available Chips
P	Philips
R	Cree
E	Epistar
S	Seoul
O	Osram

D	Lumen Output
700	700 Lumen
950	950 Lumen

E	Color Temperature
30K	3000K
40K	4000K
50K	5000K

Description:

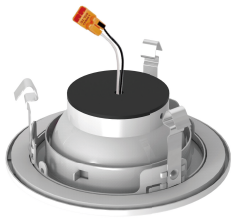

- All-in-one LED retrofit eyeball trim designed to use with Liteharbor 4 inch recessed residential downlights
- Allows for 30° vertical adjustment
- Provide 50000 hours of life at 70% lumen maintenance
- No lead or mercury
- Trim shipped with a medium base socket adapter whip

LED Light Engine:

- Cree true white® technology available
- CRI>80%
- Color temperature 3000K-5000K
- Rated for 50000 hours at 70% lumen output
- No heat, mercury or UV

Driver:

- Dedicated 120 volt driver
- Power factor >0.9
- Dimmable with the use of most incandescent, magnetic low voltage and electronic low voltage wall box dimmers
- Rated for 50 to 60Hz at 120V/277V input
- Produces less than 20% THD

Input Power	Lumens
9W	700LM
12W	950LM

Listing & Warranty:

- ETL listed to US and Canadian standards for wet locations
- 5-Year Limited Warranty

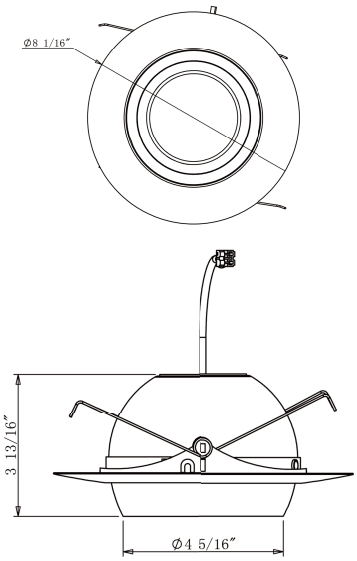

ORDER MATRIX | Example: BEL6001-ND120-P-1100-30K

A B C D E

A	Series
BEL6001	6" LED Downlight Eyeball

B	Power Supply
ND120	Non-Dimming 120V
ND277	Non-Dimming 277V
D120	0-10V Dimming 120V
D277	0-10V Dimming 277V

C	Available Chips
P	Philips
R	Cree
E	Epistar
S	Seoul
O	Osram

D	Lumen Output
1100	1100 Lumen
1400	1400 Lumen

E	Color Temperature
30K	3000K
40K	4000K
50K	5000K

Description:

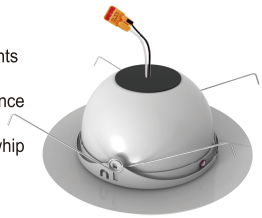

- All-in-one LED retrofit eyeball trim designed to use with Liteharbor 6 inch recessed residential downlights
- Allows for 30° vertical adjustment
- Provide 50000 hours of life at 70% lumen maintenance
- No lead or mercury
- Trim shipped with a medium base socket adapter whip

LED Light Engine:

- Cree true white® technology available
- CRI>80%
- Color temperature 3000K-5000K
- Rated for 50000 hours at 70% lumen output
- No heat, mercury or UV

Driver:

- Dedicated 120 volt driver
- Power factor >0.9
- Dimmable with the use of most incandescent, magnetic low voltage and electronic low voltage wall box dimmers
- Rated for 50 to 60Hz at 120V/277V input
- Produces less than 20% THD

Input Power	Lumens
14W	1100LM
18W	1400LM

Listing & Warranty:

- ETL listed to US and Canadian standards for wet locations
- 5-Year Limited Warranty

4" LED DOWNLIGHT MODULE RETROFIT

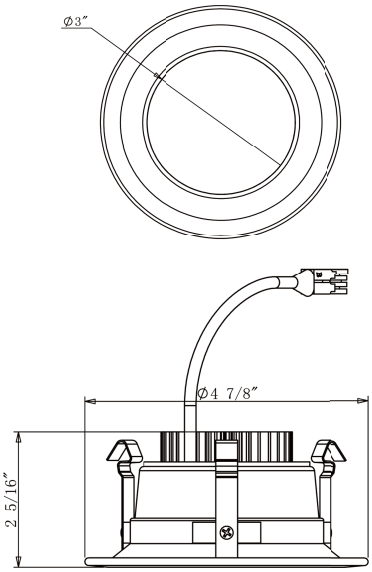

ORDER MATRIX | Example: BVL4001-ND120-P-700-30K

A **B** **C** **D** **E**

A	Series
BVL4001	4" LED Downlight Module

B	Power Supply
ND120	Non-Dimming 120V
ND277	Non-Dimming 277V
D120	0-10V Dimming 120V
D277	0-10V Dimming 277V

C	Available Chips
P	Philips
R	Cree
E	Epistar
S	Seoul
O	Osram

D	Lumen Output
700	700 Lumen
950	950 Lumen

E	Color Temperature
30K	3000K
40K	4000K
50K	5000K

Description:

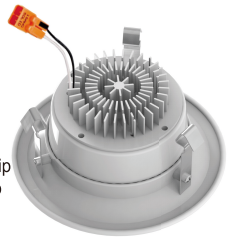

- All-in-one LED retrofit trim designed to use with Liteharbor 4 inch recessed residential downlights
- Provide 50000 hours of life at 70% lumen maintenance
- No lead or mercury
- Trim shipped with a medium base socket adapter whip
- Available with dedicated Emergency Battery Back-up

LED Light Engine:

- Cree true white® technology available
- CRI>80%
- Color temperature 2700K-5000K
- Rated for 50000 hours at 70% lumen output
- No heat, mercury or UV

Driver:

- Dedicated 120 volt driver
- Power factor >0.9
- Dimmable with the use of most incandescent, magnetic low voltage and electronic low voltage wall box dimmers
- Rated for 50 to 60Hz at 120V/277V input
- Produces less than 20% THD

Input Power	Lumens
9W	700LM
12W	950LM

Listing & Warranty:

- ETL listed to US and Canadian standards for wet locations
- 5-Year Limited Warranty

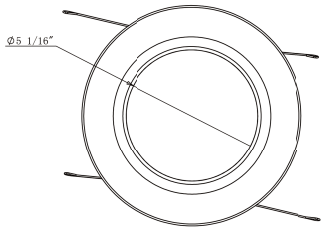

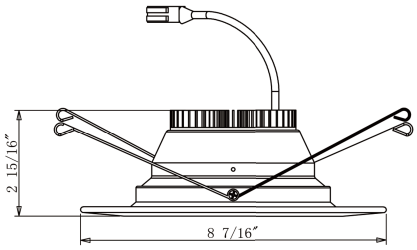

ORDER MATRIX | Example: BVL6001-ND120-P-1400-30K

A **B** **C** **D** **E**

A	Series
BVL6001	6" LED Downlight Module

B	Power Supply
ND120	Non-Dimming 120V
ND277	Non-Dimming 277V
D120	0-10V Dimming 120V
D277	0-10V Dimming 277V

C	Available Chips
P	Philips
R	Cree
E	Epistar
S	Seoul
O	Osram

D	Lumen Output
950	950 Lumen
1400	1400 Lumen

E	Color Temperature
30K	3000K
40K	4000K
50K	5000K

Description:

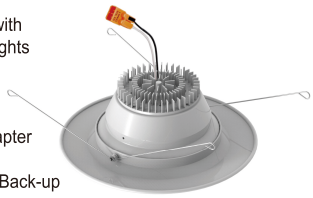

- All-in-one LED retrofit trim designed to use with Liteharbor 6 inch recessed residential downlights
- Provide 50000 hours of life at 70% lumen maintenance
- No lead or mercury
- Trim shipped with a medium base socket adapter whip
- Available with dedicated Emergency Battery Back-up

LED Light Engine:

- Cree true white® technology available
- CRI>80%
- Color temperature 2700K-5000K
- Rated for 50000 hours at 70% lumen output
- No heat, mercury or UV

Driver:

- Dedicated 120 volt driver
- Power factor >0.9
- Dimmable with the use of most incandescent, magnetic low voltage and electronic low voltage wall box dimmers
- Rated for 50 to 60Hz at 120V/277V input
- Produces less than 20% THD

Input Power	Lumens
12W	950LM
18W	1400LM

Listing & Warranty:

- ETL listed to US and Canadian standards for wet locations
- 5-Year Limited Warranty

4" LED DOWNLIGHT RETROFIT WITH DEEP REFLECTOR

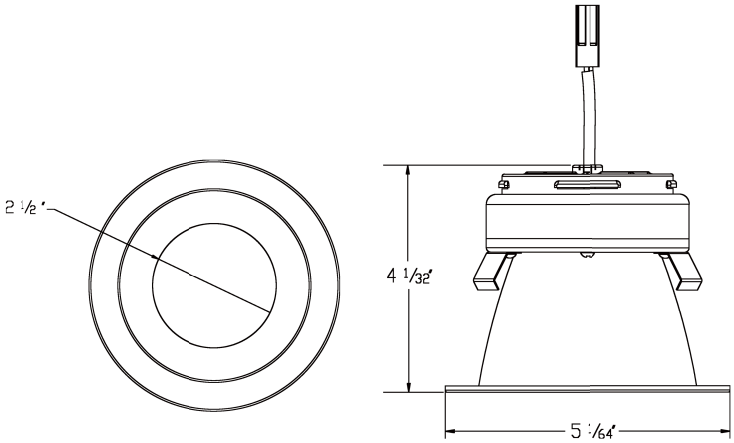

ORDER MATRIX | Example: BCL4001-SF-ND120-P-700-30K

A **B** **C** **D** **E**

A	Series
BCL4001-SF	4" LED Downlight Reflector

B	Power Supply
ND120	Non-Dimming 120V
ND277	Non-Dimming 277V
D120	0-10V Dimming 120V
D277	0-10V Dimming 277V

C	Available Chips
P	Philips
R	Cree
E	Epistar
S	Seoul
O	Osram

D	Lumen Output
700	700 Lumen
950	950 Lumen

E	Color Temperature
30K	3000K
40K	4000K
50K	5000K

ORDER MATRIX | Example: BCL4001-SF-C-CR

A **B** **C**

A	Trim
SF	Self Flanged
SFW	Self Flanged White

B	Reflector Finish
C	Clear
HZ	Haze
W	White

C	Lens Type
CR	Clear Tempered
SB	Sand Blasted

Description:

- Eco-friendly no lead or mercury
- Compatible with Liteharbor 4 inch recessed downlight
- Dimmable integral driver down to 10%
- Designed to last a minimum 50,000 hours at L70

Reflector:

- Reflector is designed to gather the light scattered by the led chip and shape it into functional beams that minimize brightness and glare while eliminating lamp image
- Reflector is high quality available in clear, semi diffuse or white finish. Self flange trim is standard.

Features:

- Deep set LED for superior glare and cut-off
- Cree True White® technology
- Comprehensive solution with driver electronics, optics and core thermals
- Versatile form factor for small-aperture designs

LED Module:

- With integral power supply
- Nominal input power: 12W
- Module lumen output: 950 lm
- CRI: 80+
- CCT: 3000K-5000K

Mounting:

- Spring clips safely secure LED trim and module to housing.

Listing & Warranty:

- ETL listed to US and Canadian standards for wet locations
- 5-Year Limited Warranty

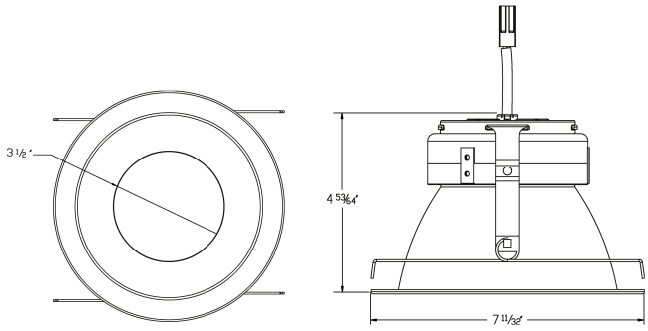

ORDER MATRIX | Example: BCL6001-SF-ND120-P-1100-30K

A	B	C	D	E

A	Series
BCL6001-SF	6" LED Downlight Reflector

B	Power Supply
ND120	Non-Dimming 120V
ND277	Non-Dimming 277V
D120	0-10V Dimming 120V
D277	0-10V Dimming 277V

C	Available Chips
P	Philips
R	Cree
E	Epistar
S	Seoul
O	Osram

D	Lumen Output
1100	1100 Lumen
1400	1400 Lumen

E	Color Temperature
30K	3000K
40K	4000K
50K	5000K

ORDER MATRIX | Example: BCL6001-SF-C-CR

A	B	C

A	Trim
SF	Self Flanged
SFW	Self Flanged White

B	Reflector Finish
C	Clear
HZ	Haze
W	White

C	Lens Type
CR	Clear Tempered
SB	Sand Blasted

Description:

- Eco-friendly no lead or mercury
- Compatible with Liteharbor 6 inch recessed downlight
- Dimmable integral driver down to 10%
- Designed to last a minimum 50,000 hours at L70

Reflector:

- Reflector is designed to gather the light scattered by the led chip and shape it into functional beams that minimize brightness and glare while eliminating lamp image
- Reflector is high quality available in clear, semi diffuse or white finish. Self flange trim is standard.

Features:

- Deep set LED for superior glare and cut-off
- Cree True White® technology
- Comprehensive solution with driver electronics, optics and core thermals
- Versatile form factor for small-aperture designs

LED Module:

- 1100 lumen LED
- With integral power supply
- Nominal input power: 15W
- Module lumen output: 1100 lm
- CRI: 80+
- CCT: 3000K-5000K

- 1400 lumen LED
- With integral power supply
- Nominal input power: 18W
- Module lumen output: 1400 lm
- CRI: 80+
- CCT: 3000K-5000K

Mounting:

- Torsion spring safely secure LED trim and module to housing.

Listing & Warranty:

- ETL listed to US and Canadian standards for wet locations
- 5-Year Limited Warranty

4" LED DOWNLIGHT RETROFIT WITH SHALLOW REFLECTOR

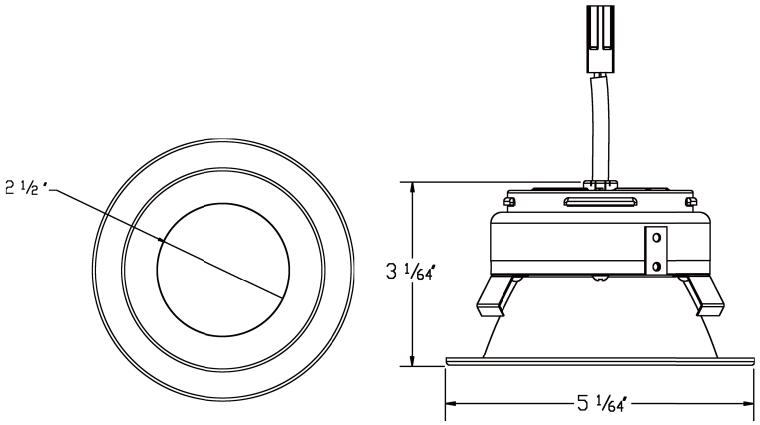

ORDER MATRIX | Example: BCSL4001-SF-ND120-P-700-30K

A **B** **C** **D** **E**

A	Series
BCSL4001-SF	4" LED Downlight Reflector

B	Power Supply
ND120	Non-Dimming 120V
ND277	Non-Dimming 277V
D120	0-10V Dimming 120V
D277	0-10V Dimming 277V

C	Available Chips
P	Philips
R	Cree
E	Epistar
S	Seoul
O	Osram

D	Lumen Output
700	700 Lumen
950	950 Lumen

E	Color Temperature
30K	3000K
40K	4000K
50K	5000K

ORDER MATRIX | Example: BCSL4001-SF-C-CR

A **B** **C**

A	Trim
SF	Self Flanged
SFW	Self Flanged White

B	Reflector Finish
C	Clear
HZ	Haze
W	White

C	Lens Type
CR	Clear Tempered
SB	Sand Blasted

Description:

- Eco-friendly no lead or mercury
- Compatible with Liteharbor 4 inch recessed downlight
- Dimmable integral driver down to 10%
- Designed to last a minimum 50,000 hours at L70

Reflector:

- Reflector is designed to gather the light scattered by the led chip and shape it into functional beams that minimize brightness and glare while eliminating lamp image
- Reflector is high quality available in clear, semi diffuse or white finish. Self flange trim is standard.

Features:

- Deep set LED for superior glare and cut-off
- Cree True White® technology
- Comprehensive solution with driver electronics, optics and core thermals
- Versatile form factor for small-aperture designs

LED Module:

- With integral power supply
- Nominal input power: 12W
- Module lumen output: 950 lm
- CRI: 85+
- CCT: 3000K-5000K

Mounting:

- Spring clips safely secure LED trim and module to housing.

Listing & Warranty:

- ETL listed to US and Canadian standards for wet locations
- 5-Year Limited Warranty

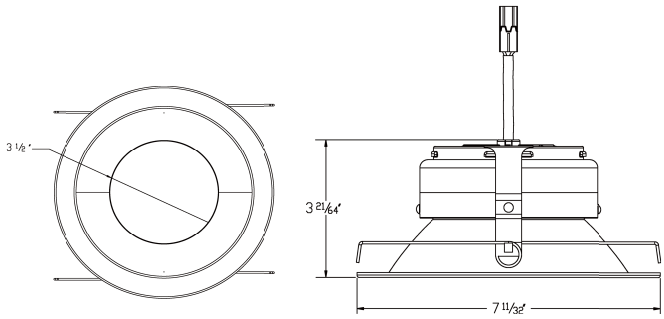

ORDER MATRIX | Example: BCSL6001-SF-ND120-P-1100-30K

A **B** **C** **D** **E**

A	Series
BCSL6001-SF	6" LED Downlight Reflector

B	Power Supply
ND120	Non-Dimming 120V
ND277	Non-Dimming 277V
D120	0-10V Dimming 120V
D277	0-10V Dimming 277V

C	Available Chips
P	Philips
R	Cree
E	Epistar
S	Seoul
O	Osram

D	Lumen Output
1100	1100 Lumen
1400	1400 Lumen

E	Color Temperature
30K	3000K
40K	4000K
50K	5000K

ORDER MATRIX | Example: BCSL6001-SF-C-CR

A **B** **C**

A	Trim
SF	Self Flanged
SFW	Self Flanged White

B	Reflector Finish
C	Clear
HZ	Haze
W	White

C	Lens Type
CR	Clear Tempered
SB	Sand Blasted

Description:

- Eco-friendly no lead or mercury
- Compatible with Liteharbor 6 inch recessed downlight
- Dimmable integral driver down to 10%
- Designed to last a minimum 50,000 hours at L70

Reflector:

- Reflector is designed to gather the light scattered by the led chip and shape it into functional beams that minimize brightness and glare while eliminating lamp image
- Reflector is high quality available in clear, semi diffuse or white finish. Self flange trim is standard.

Features:

- Deep set LED for superior glare and cut-off
- Cree True White® technology
- Comprehensive solution with driver electronics, optics and core thermals
- Versatile form factor for small-aperture designs

LED Module:

- 1100 lumen LED
- With integral power supply
- Nominal input power: 15W
- Module lumen output: 1100 lm
- CRI: 80+
- CCT: 3000K-5000K

- 1400 lumen LED
- With integral power supply
- Nominal input power: 18W
- Module lumen output: 1400 lm
- CRI: 80+
- CCT: 3000K-5000K

Mounting:

- Torsion spring safely secure LED trim and module to housing.

Listing & Warranty:

- ETL listed to US and Canadian standards for wet locations
- 5-Year Limited Warranty

4" HIGH LUMEN ARCHITECTURAL DOWNLIGHT

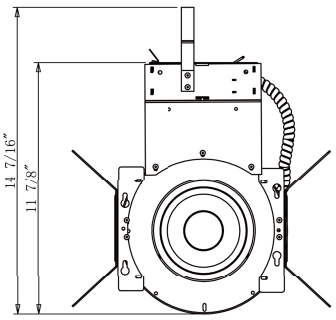

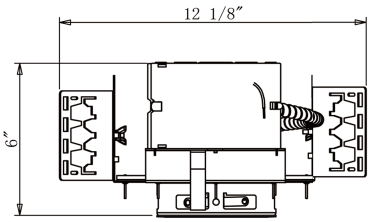

ORDER MATRIX | Example: BAL4001-ND120-P-2000-30K-C

A B C D E F

A	Series
BAL4001	4" Architectural Downlight

B	Power Supply
ND120	Non-Dimming 120V
ND277	Non-Dimming 277V
D120	0-10V Dimming 120V
D277	0-10V Dimming 277V

C	Available Chips
P	Philips
R	Cree
E	Epistar
S	Seoul
O	Osram

D	Lumen Output
900	900 Lumen
1200	1200 Lumen
1500	1500 Lumen
2000	2000 Lumen

E	Color Temperature
30K	3000K
40K	4000K
50K	5000K

F	Options
EM	Emergency Backup
C	C-Channel Bar Hanger
F	Flat Bar Hanger
H	Wood Joist Bar Hanger

ORDER MATRIX | Example: BAL4001-SF-C-CR

A B C

A	Trim
SF	Self Flanged
SFW	Self Flanged White
	NO Flange

B	Reflector Finish
C	Clear
HZ	Haze
W	White

C	Lens Type
CR	Clear Tempered
SB	Sand Blasted

Description:

- Lighting is smooth and comfortable while using 50% less energy than the common 26W CFL downlight.
- Eco-friendly no lead or mercury
- Designed to install into an existing downlights mounting frame and convert them into energy efficient LED downlights to save anywhere from 35% up to 75% on energy cost.
- Idea suited for use in commercial, retail and other architectural applications
- Available with dedicated Emergency Battery Back-up

Reflector:

- High quality reflector with 1.2mm thickness
- Optional painted white flange is available

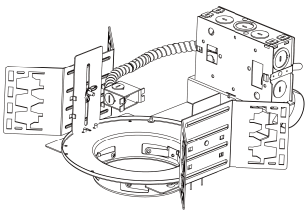

Mounting:

- Designed to install into an existing downlights mounting frame and convert them into energy efficient LED downlights.
- Flex is designed to attach into existing junction box.
- Vertically adjustable universal mounting brackets accept flat bar hangers, conduit or C channel.
- The reflector assembly is held in with 4 “butter-fly” spring clips.
- Reflector assy quickly attaches with lockable quick connect. Hanger bars ordered separately.
- Compatible with C-channel, flat bar wood joist bar hanger and EMT

Thermal Protector:

- External thermal device is located on the junction box wrap.

Listing & Warranty:

- ETL listed to US and Canadian standards for wet locations
- 5-Year Limited Warranty

Reflector Assembly:

- Reflector easily wires to dedicated frame with locking quick connect

LED Module:

- Cree true white® technology available
- CRI>80%
- Color temperature 3000K-5000K
- Rated for 50000 hours at 70% lumen output
- No heat, mercury or UV

Electrical System:

- Electrical System
- Thermal protection guard protects the LED module from overheating and will dim LED module if necessary
- PF>0.95/60Hz
- Fully dimmable down to 10% of initial light output with a 0-10 Volt dimmer

Input Power	Lumens
11W (+/- 5%)	900LM
15W (+/- 5%)	1200LM
18W (+/- 5%)	1500LM
25W (+/- 5%)	2000LM

Frame:

- Constructed from 16-gauge steel, die-formed construction for max heat dissipation and rust protection.

Clearance:

- Frames require a minimum clearance of 3” ring from thermal insulation and 1/2” from adjacent building component.

Junction Box:

- Plaster frame integrated 29 cubic inch 0.064" thick galvanized steel
- Provided with four ½" knockouts, one ¾" knockout and four Romex knockouts with true pryout slots and strain clamps. Designed for straight through conduit runs.
- Electrical connections are made through a single junction box door.
- Green wire provided for installation with ground wire fed through PVC pipe conduit.

Driver:

- The LED driver is mounted to the J-box cover and is accessible from below the ceiling.
- Rated for 50 to 60Hz at 120V/277V input
- Produces less than 20% THD

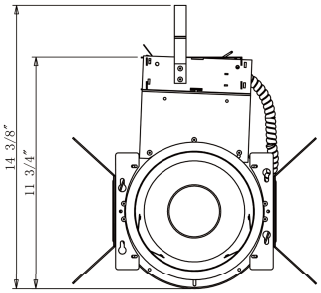

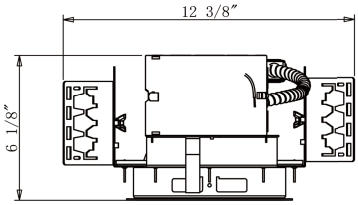

ORDER MATRIX | Example: BAL6001-ND120-P-3000-30K-C

A B C D E F

A	Series
BAL6001	6" Architectural Downlight

B	Power Supply
ND120	Non-Dimming 120V
ND277	Non-Dimming 277V
D120	0-10V Dimming 120V
D277	0-10V Dimming 277V

C	Available Chips
P	Philips
R	Cree
E	Epistar
S	Seoul
O	Osram

D	Lumen Output
1250	1250 Lumen
2000	2000 Lumen
3000	3000 Lumen

E	Color Temperature / CRI
30K	3000K
40K	4000K
50K	5000K
60K	6000K

F	Options
EM	Emergency Backup
C	C-Channel Bar Hanger
F	Flat Bar Hanger
WJ	Wood Joist Bar Hanger

ORDER MATRIX | Example: BAL6001-SF-C-CR

A B C

A	Trim
SF	Self Flanged
SFW	Self Flanged White
	NO Flange

B	Reflector Finish
C	Clear
HZ	Haze
W	White

C	Lens Type
CR	Clear Tempered
SB	Sand Blasted

Description:

- Lighting is smooth and comfortable while using 50% less energy than the common 26W & 32W CFL downlight.
- Eco-friendly no lead or mercury
- Designed to install into an existing downlights mounting frame and convert them into energy efficient LED downlights to save anywhere from 35% up to 75% on energy cost.
- Idea suited for use in commercial, retail and other architectural applications
- Available with dedicated Emergency Battery Back-up

Reflector:

- High quality reflector with 1.2mm thickness
- Optional painted white flange is available

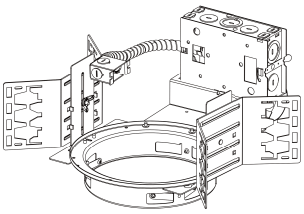

Mounting:

- Designed to install into an existing downlights mounting frame and convert them into energy efficient LED downlights.
- Flex is designed to attach into existing junction box.
- Vertically adjustable universal mounting brackets accept flat bar hangers, conduit or C channel.
- The reflector assembly is held in with 4 “butter-fly” spring clips.
- Reflector assy quickly attaches with lockable quick connect. Hanger bars ordered separately.
- Compatible with C-channel, flat bar wood joist bar hanger and EMT

Thermal Protector:

- External thermal device is located on the junction box wrap.

Listing & Warranty:

- ETL listed to US and Canadian standards for wet locations
- 5-Year Limited Warranty

Reflector Assembly:

- Reflector easily wires to dedicated frame with locking quick connect

LED Module:

- Cree true white® technology available
- CRI>80%
- Color temperature 3000K-5000K
- Rated for 50000 hours at 70% lumen output
- No heat, mercury or UV

Electrical System:

- Thermal protection guard protects the LED module from overheating and will dim LED module if necessary
- PF>0.95/60Hz
- Fully dimmable down to 10% of initial light output with a 0-10 Volt dimmer.

Input Volt	Input Volt	Lumens
120V/277V	16W (+/- 5%)	1250LM
120V/277V	25W (+/- 5%)	2000LM
120V/277V	37W (+/- 5%)	3000LM

Frame:

- Constructed from 16-gauge steel, die-formed construction for max heat dissipation and rust protection.

Clearance:

- Frames require a minimum clearance of 3” ring from thermal insulation and 1/2” from adjacent building component.

Junction Box:

- Plaster frame integrated 29 cubic inch 0.064" thick galvanized steel
- Provided with four ½" knockouts, one ¾" knockout and four Romex knockouts with true pryout slots and strain clamps. Designed for straight through conduit runs.
- Electrical connections are made through a single junction box door.
- Green wire provided for installation with ground wire fed through PVC pipe conduit.

Driver:

- The LED driver is mounted to the J-box cover and is accessible from below the ceiling.
- Rated for 50 to 60Hz at 120V/277V input
- Produces less than 20% THD

8" HIGH LUMEN ARCHITECTURAL DOWNLIGHT

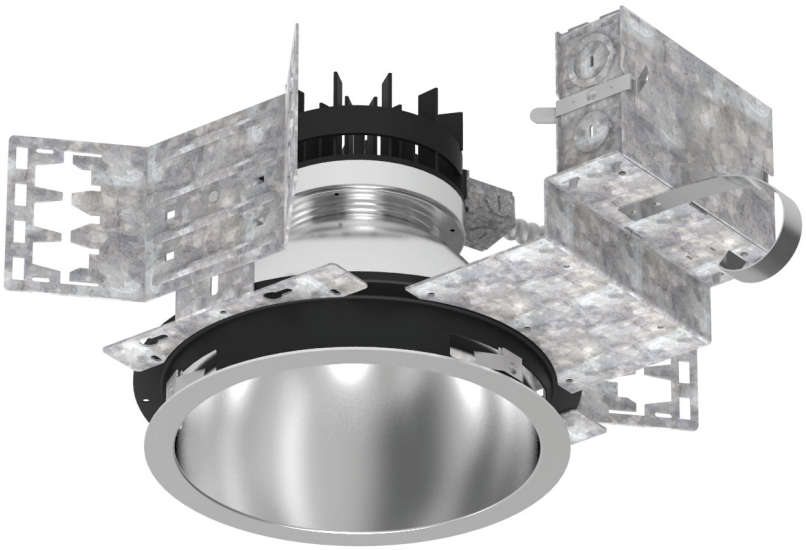

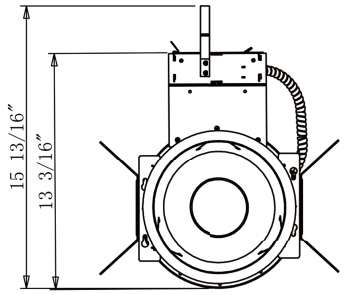

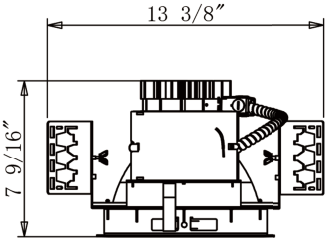

ORDER MATRIX | Example: BAL8001-ND120-P-4000-30K-C

A **B** **C** **D** **E** **F**

A	Series
BAL8001	8" Architectural Downlight

B	Power Supply
ND120	Non-Dimming 120V
ND277	Non-Dimming 277V
D120	0-10V Dimming 120V
D277	0-10V Dimming 277V

C	Available Chips
P	Philips
R	Cree
E	Epistar
S	Seoul
O	Osram

D	Lumen Output
1250	1250 Lumen
2000	2000 Lumen
3000	3000 Lumen
4000	4000 Lumen

E	Color Temperature
30K	3000K
40K	4000K
50K	5000K

F	Options
EM	Emergency Backup
C	C-Channel Bar Hanger
F	Flat Bar Hanger
H	Wood Joist Bar Hanger

ORDER MATRIX | Example: BAL8001-SF-C-CR

A **B** **C**

A	Trim
SF	Self Flanged
SFW	Self Flanged White
	No Flange

B	Reflector Finish
C	Clear
HZ	Haze
W	White

C	Lens Type
CR	Clear Tempered
SB	Sand Blasted

Description:

- Lighting is smooth and comfortable while using 50% less energy than the common 26W, 32W, 42W CFL downlight.
- Eco-friendly no lead or mercury
- Designed to install into an existing downlights mounting frame and convert them into energy efficient LED downlights to save anywhere from 35% up to 75% on energy cost.
- Idea suited for use in commercial, retail and other architectural applications
- Available with dedicated Emergency Battery Back-up

Reflector:

- High quality reflector with 1.2mm thickness
- Optional painted white flange is available

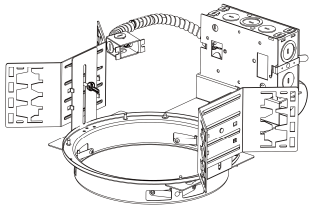

Mounting:

- Designed to install into an existing downlights mounting frame and convert them into energy efficient LED downlights.
- Flex is designed to attach into existing junction box.
- Vertically adjustable universal mounting brackets accept flat bar hangers, conduit or C channel.
- The reflector assembly is held in with 4 “butter-fly” spring clips.
- Reflector assy quickly attaches with lockable quick connect. Hanger bars ordered separately.
- Compatible with C-channel, flat bar wood joist bar hanger and EMT

Thermal Protector:

- External thermal device is located on the junction box wrap.

Listing & Warranty:

- ETL listed to US and Canadian standards for wet locations
- 5-Year Limited Warranty

Reflector Assembly:

- Reflector easily wires to dedicated frame with locking quick connect

LED Module:

- Cree true white® technology available
- CRI>80%
- Color temperature 3000K-5000K
- Rated for 50000 hours at 70% lumen output
- No heat, mercury or UV

Electrical System:

- Thermal protection guard protects the LED module from overheating and will dim LED module if necessary
- PF>0.95/60Hz
- Fully dimmable down to 10% of initial light output with a 0-10 Volt dimmer

Input Volt	Input Volt	Lumens
120V/277V	25W (+/- 5%)	2000LM
120V/277V	37W (+/- 5%)	3000LM
120V/277V	50W (+/- 5%)	4000LM

Frame:

- Constructed from 16-gauge steel, die-formed construction for max heat dissipation and rust protection.

Clearance:

- Frames require a minimum clearance of 3” ring from thermal insulation and 1/2” from adjacent building component.

Junction Box:

- Plaster frame integrated 29 cubic inch 0.064" thick galvanized steel
- Provided with four ½" knockouts, one ¾" knockout and four Romex knockouts with true pryout slots and strain clamps. Designed for straight through conduit runs.
- Electrical connections are made through a single junction box door.
- Green wire provided for installation with ground wire fed through PVC pipe conduit.

Driver:

- The LED driver is mounted to the J-box cover and is accessible from below the ceiling.
- Rated for 50 to 60Hz at 120V/277V input
- Produces less than 20% THD

COB Adjustable Multiple Downlight

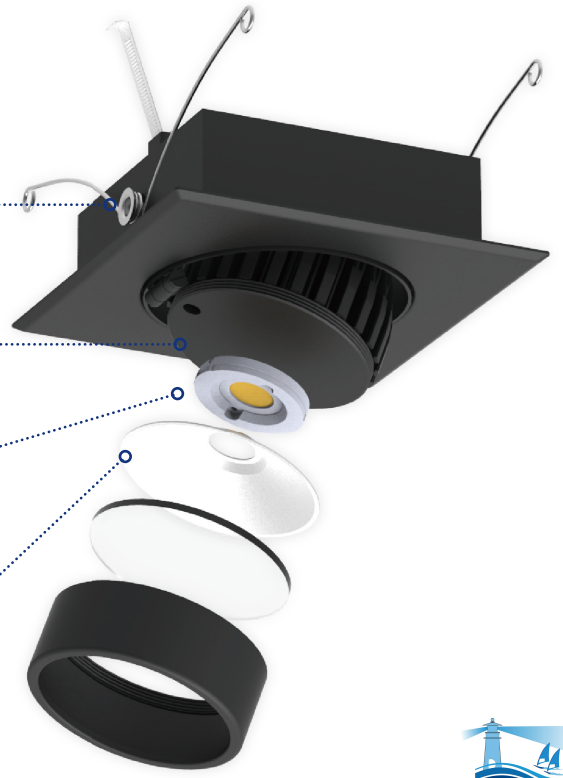

Torsion springs easily install to the fixture

Heat sink provides excellent thermal management ensuring long LED life and maintains stable color points.

Available Chips including Epistar, Citizen, Sharp, Seoul, Osram

High reflectance reflector

COB ADJUSTABLE MULTIPLE DOWNLIGHT

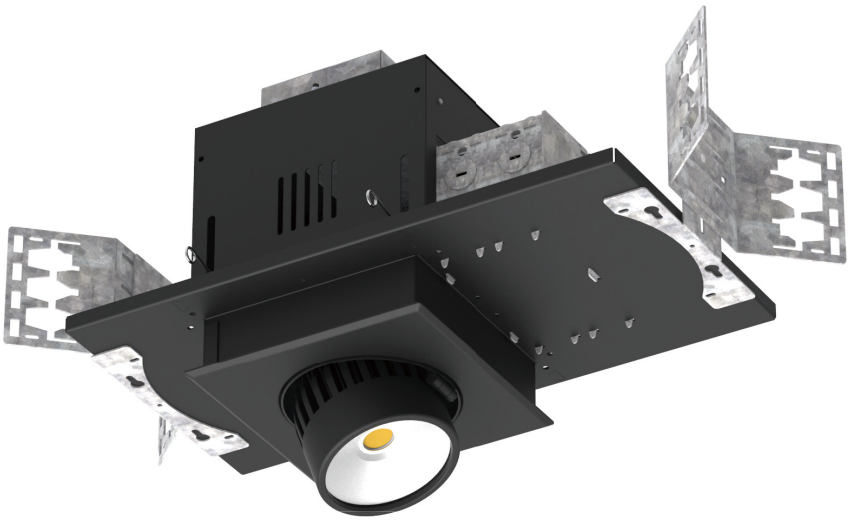

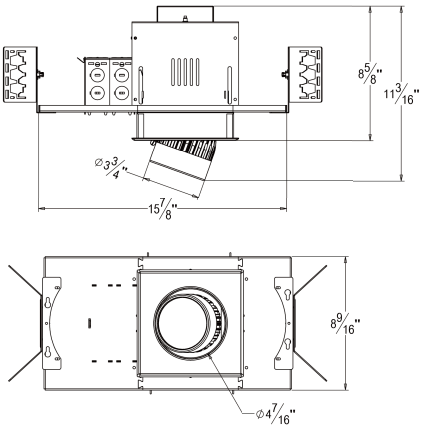

ORDER MATRIX | Example: DGL-GA-ND120-P-1L-30K-12

A	B	C	D	E	F

A	Series
DGL-GA	Cob Adjustable Multiple Downlight

B	Power Supply
ND120	Non-Dimming 120V
ND277	Non-Dimming 277V
D120	0-10V Dimming 120V
D277	0-10V Dimming 277V

C	Available Chips
P	Philips
R	Cree
E	Epistar
S	Seoul
O	Osram

D	Lamp/ Lumen
1L	1 Lamp/1022 LM
2L	2-Lamp/2044 LM
3L	3-Lamp/3066 LM
4L	4-Lamp/4088 LM

E	Color Temperature
27K	2700K
30K	3000K
35K	3500K
41K	4100K

F	Optics
12	12° spot
24	24° narrow flood
36	36° flood
54	54° flood

1L

2L

3L

4L

4L

Features:

- Fixtures are available in one to four lamps
- Each LED can independently 360° rotation and up to 90° horizontal adjustment
- No harmful ultraviolet or infrared wavelengths
- No lead or mercury
- 50000 hours average rated life at 70% output

Lamp Q'ty	Watt	Lumen
1 Lamp	14W	1022LM
2-Lamp	28W	2044LM
3-Lamp	42W	3066LM
4-Lamp	56W	4088LM
4-Lamp	56W	4088LM

LED Light Engine:

- High output led arrays provide outstanding reliability, performance and color quality.
- 2700K/3000K/3500K/4100K white phosphor high performance
- CRI>80%
- LED mounted to die-cast aluminum heat sink

Electrical:

- Dimmable 120V
- Frequency 50-60Hz
- Electrical constant current LED driver
- Thermal protection guard protects the LED module from overheating and will dim LED module if necessary.
- Power factor >95%
- Multiple dimming options available

Optics:

- 12° spot, 24° narrow flood, 36° flood and 54° wide flood

Housing:

- Heavy gauge cold rolled steel with white or black finish
- Universal housing design installs in suspended grid, plaster or drywall
- Drivers are accessible from above and below ceiling
- Light engine and driver can be upgraded to accommodate future technology improvements
- Equipped with quick connect to trim assembly for easy installation.

Mounting:

- Can accommodate to 1" thick ceiling thickness
- Supplied with butterfly brackets to allow up-to 3" vertical adjustment
- Compatible with C-channel, flat bar, wood joist bar and EMT
- Bar hangers must be ordered separately
- C-channel are recommended for T-bar ceilings

Trim Assembly:

- Includes integral power supply for each individual head
- Quick connection supplied for easy installation and wiring to frame-in
- Ease of installation and maintenance with access to power supply

Listing/Warranty:

- ETL listed to US and Canadian standards for wet locations
- 5-year limited warranty

RGBW Multiple Downlight

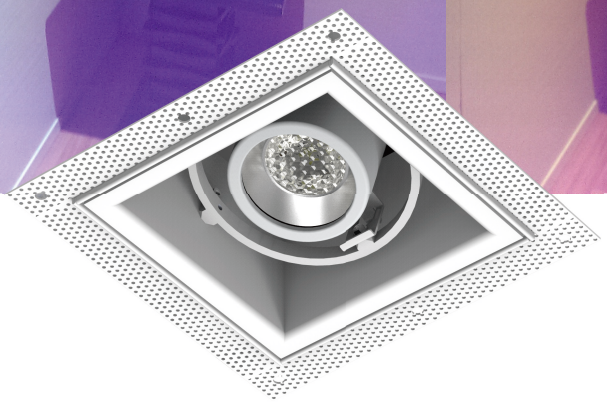

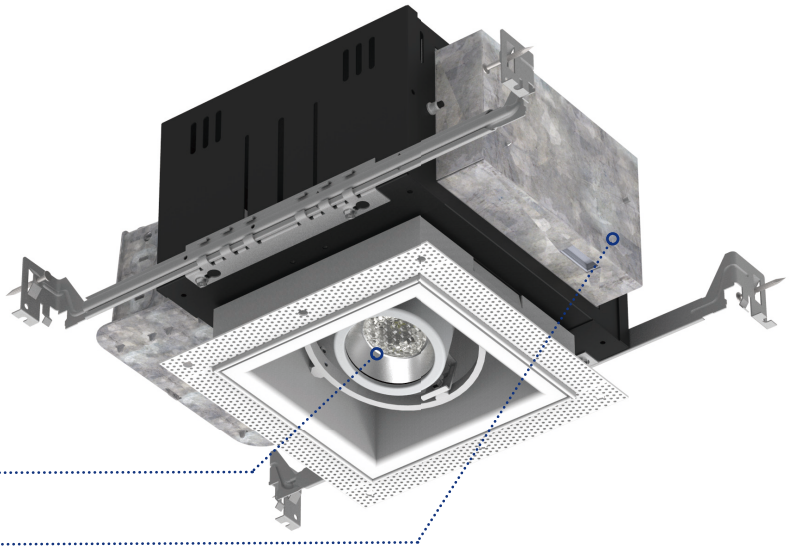

COB RGBW chip, color changing

RJ45 in/ out 512 DMX decoder

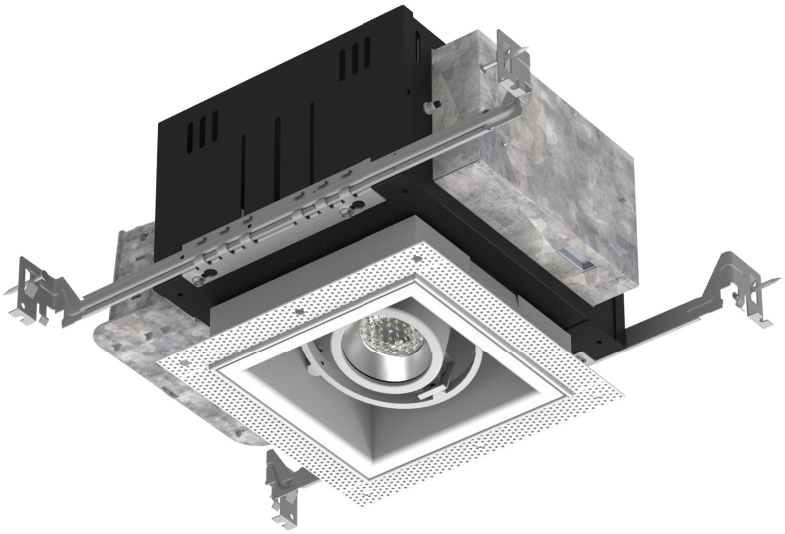

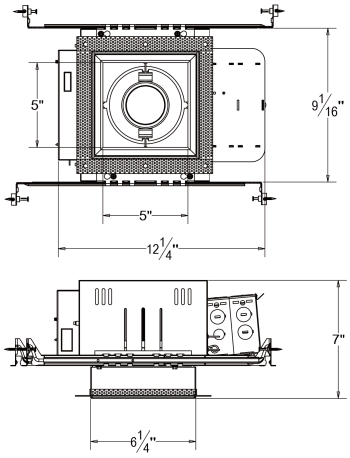

ORDER MATRIX | Example: LPBOR-ND120-RGBW-40-T-1L-12

A	B	C	D	E	F	G

A	Series
LPBOR	RGBW Multiple Downlight

B	Power Supply
ND120	Non-Dimming 120V
ND277	Non-Dimming 277V
D120	0-10V Dimming 120V
D277	0-10V Dimming 277V

C	Type
RGB	RGB
RGBW	RGBW
CW	CW=5000K
WW	WW=2700K

D	Power
30	30W
40	40W

E	Trim
T	Trimmed
TL	Trimless

F	Lamp
1L	1 Lamp
2L	2-Lamp
3L	3-Lamp
4L	4-Lamp

G	Optics
12	12° spot
24	24° narrow flood
36	36° flood
54	54° flood

Technical Info:

DMX decoder 512DMX	512/1990 Standard	12/24VDC
	256 levels	4 channels
LED Driver	85~240VAC/12VDC	UL Listed
	5 years warranty	MeanWell/Rico
RGBW Chip	40W RGBW	Individually addressable channels
	9x9mm	Extreme Lm density
	COB	Low Thermal resistance
	Glass lens	Level 1 moisture sensitivity
	MCPCB Available	Compatible with high Uniformity mixing lenses
FIXTURE	Trim-less or trimmed	UL/ETL Listed
	0.5mm thick gauge Aluminum/steel sheet	4"device" compartments for electrical equipment
	High grade commercial brackets	Swivel in all directions floating head
	1/2"UL standard Knockouts	5-year warranty
CERTIFICATE	ETL,UL,CCC,CE,TUV,RoHs,Fcc	
WARRANTY	5 Years	

Description:

- BOREALIS Is a RGBW state of the art Down Light.
- Imagine creating ANY COLOR your mood desires just by the press of a button*:
- • Regular lighting
- • Reading mode
- • Color changing
- • Party mode
- * DMX 512 controller needed. Sold separately

Features:

- Led Plus BOREALIS, is the result of extensive investigation and exhaustive design that offers a perfectly balanced RGBW high powered fixture that can be controlled via DMX 512 universal protocol.
- It can have each of the 4 channels individually addressed allowing a combination of millions of colors and sequences.
- The Decoder has up to 256 steps of brightness.
- BOREALIS is ETL Listed and has been built using the highest standards and best materials resulting in a high efficient, multi color, multi controlled network – able down light.
- The floating head on BOREALIS, permits trim adjusting of angles and direction of the beam.
- The trimless option offers a clean invisible trim installation creating a perfect and modern architectural design.
- BOREALIS is compatible with most 512 Universal controllers in the market. Its super bright 40W RGBW COB chip is unique and offers ONE POINT OF LIGHT and SEAMLESS color mixture avoiding phantom shadows.
- Crisp, beautiful and defined colors at the reach of your fingertips. BOREALIS the lighting of the future.

Applications:

- Down-lighting with RGBW and 512DMX control
- High end residence and Commercial applications
- Hotel
- Casino
- Photo Studio
- Art gallery
- Film studio
- Film set

Warranty:

- 5-year limited warranty:
  - Based on a 12H/Day usage on a commercial application performed
  - On an installation that complies with UL requirements and standards.

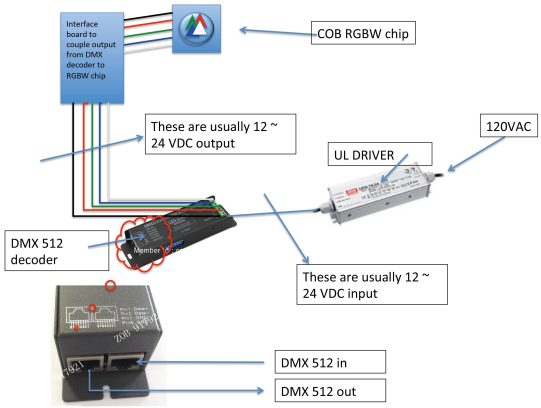

COB Multiple Downlight

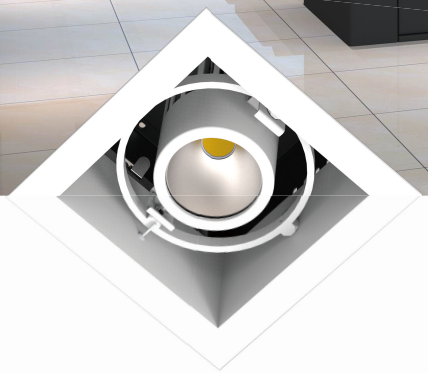

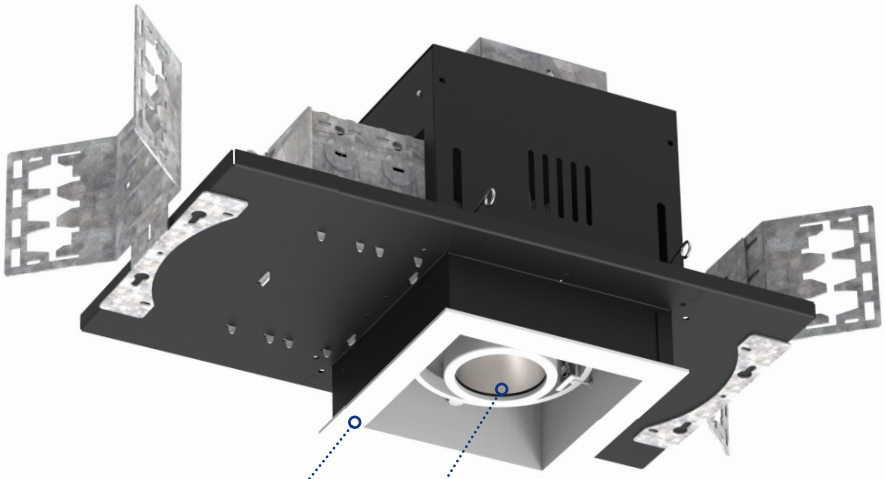

Trim or Trimless Options

Floating head permits trim adjusting of angles and direction of the beam

COB MULTIPLE DOWNLIGHT

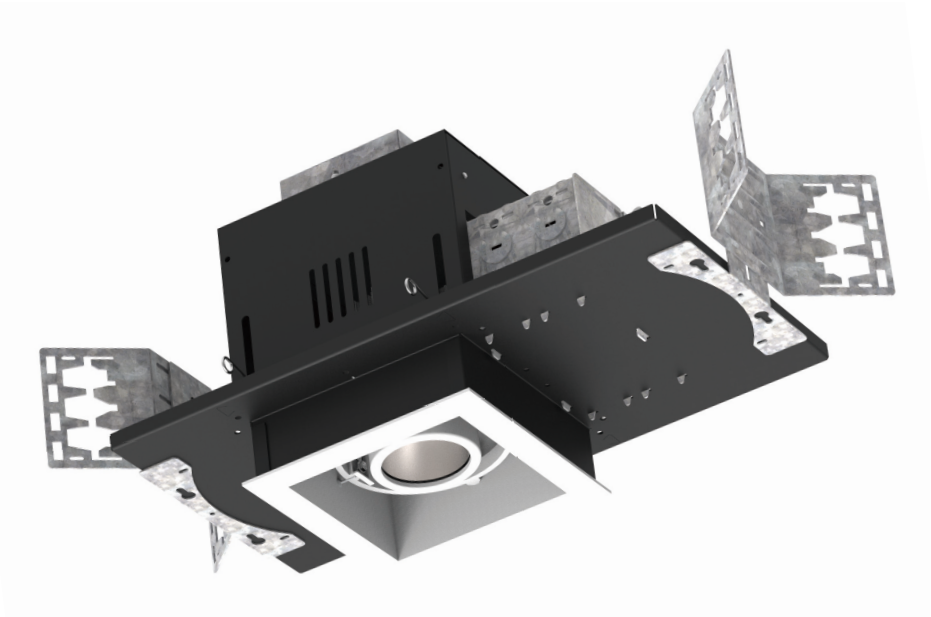

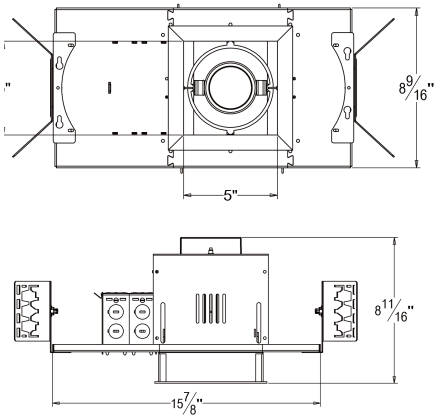

ORDER MATRIX | Example: DGL-GA-DN120-P-1L-30K-12

A B C D E F

A	Series
DGL-GA	COB Multiple Downlight

B	Power Supply
ND120	Non-Dimming 120V
ND277	Non-Dimming 277V
D120	0-10V Dimming 120V
D277	0-10V Dimming 277V

C	Available Chips
P	Philips
R	Cree
E	Epistar
S	Seoul
O	Osram

D	Lamp/ Lumen
1L	1 Lamp/1022 LM
2L	2-Lamp/2044 LM
3L	3-Lamp/3066 LM
4L	4-Lamp/4088 LM

E	Color Temperature
27K	2700K
30K	3000K
35K	3500K
50K	5000K
60K	6000K

F	Optics
12	12° spot
24	24° narrow flood
36	36° flood

1L

2L

3L

4L

4L

Description:

- Easy Installation and maintenance
- All parts and components accessible from below the ceiling
- Lamp holders are adjustable 360° horizontal and 30° vertical for spot lighting in multiple directions
- Actual adjustment may vary depending on the lamp beam spread

Housing:

- The inner trim is constructed of 22GA steel
- Finish can be black, white or silver
- Special finish please confirm with factory
- Internal wire bundles and locked and covered with a glass sleeve
- Junction box can be accessible from below the ceiling with a plate

Mounting Frame:

- Can be accommodate a 1/2" to 1 1/4" ceiling thickness
- Channel bracket allow up to 5" vertical adjustable
- Universal mounting brackets included
- Compatible with C-channel, flat bar, and EMT
- C-channel are recommended for T-bar ceilings
- Bar hangers must be ordered separately

Flanged Trim:

- Extruded trim frame includes torsion springs for convenient installations or removal from the housing

Trimless:

- Optional mud frame available for trimless mounting
- The perforated mesh frame provided adheres to joint compound for seamless and trimless mounting

LED Light Engine:

- 2700k-6000k
- CRI>80%
- LED mounted to die-cast/extruded aluminum heat sink
- 50000 hours average rated life at 70% lumen

Electrical System:

- 120-277V input
- Class 2 power supply
- Over voltage, over current and short circuit protection
- Auto recovery
- 10% dimmable is available 120V only
- 10/15/17.8/20W each lamp
- LM from 650-950 each lamp

Lamp Q'ty	Wattage	Lumen	Color Temperature
1 Lamp	20W	950LM	2700K-6000K
2-Lamp	40W	1900LM	
3-Lamp	60W	2850LM	
4-Lamp	80W	3800LM	
4-Lamp	80W	3800LM	

Track Lighting

- Tracking adaptor
- LED driver included
- Passive aluminum heat sink provides excellent thermal management
- Available Chips including Epistar, Citizen, Sharp, Seoul, Osram
- Optics: 16° Spot, 24° Narrow Flood, 32° Flood, and 50° Wide Flood

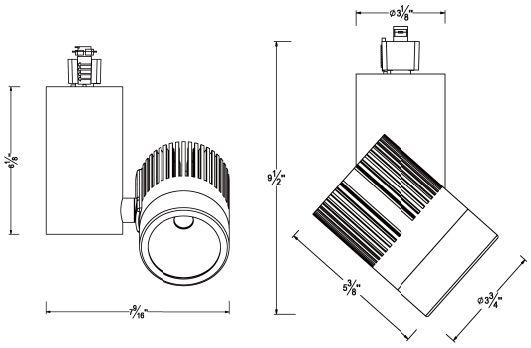

ORDER MATRIX | Example: K3023L-BK-ND120-P-27K-16

A	B	C	D	E	F

A	Series
K3023L	50W/ 4100LM
K3023M	32W/ 2550LM
K3023M2	64W/ 5100LM
K3023S	10W/ 850LM

B	Finish
WH	White
BK	Black
SV	Silver
SN	Satin Nickel

C	Power Supply
ND120	Non-Dimming 120V
ND277	Non-Dimming 277V
D120	0-10V Dimming 120V
D277	0-10V Dimming 277V

D	Available Chips
P	Philips
R	Cree
E	Epistar
S	Seoul
O	Osram

E	Color Temperature
27K	2700K
30K	3000K
40K	4000K
50K	5000K
60K	6000K

F	Beam Spread
16	16° Spot
24	24° Narrow Flood
32	32° Flood
50	50° Wide Flood

LED Light Engine:
- Color Temperature 2700K-6000K
- CRI 80+
- 3 Step MacAdam (3 SDMC)
- Passive aluminum heat sink
- 50,000 hrs average rated life

Electrical System:
- 120V/277V 50/60Hz input
- Over voltage, over current and short circuit protection: Auto recovery
- MTBF > 100,000 hours

Optics:
- 16° Spot, 24° Narrow Flood, 32° Flood, and 50° Wide Flood

Dimming:
- Track Dimming
  - (ELV) reverse phase control dimmers. 120V only.
  - Dimmable 100 – 10%
- Canopy Dimming
  - ELV Dimming 120V
  - 0-10V Dimming 120V or 277V

Compatibility:
- Track luminaire is designed for use with the following track systems:
  - Single Circuit/Single Neutral 120V
  - Two Circuit/Single Neutral 120V
  - Two Circuit / Two Neutral 120V
  - Two Circuit / Two Neutral 277V

Listing & Warranty:
- ETL Listed to US and Canadian standards for dry locations
- 5-Year Limited Warranty

K3023L
- Single head, 50W/ 4100 Lumen
- Finish: White/ Black/ Silver/ Satin Nickel

K3023M
- Single head, 32W/ 2550 Lumen
- Finish: White/ Black/ Silver/ Satin Nickel

K3023M2
- Twin heads, 64 W/ 5100 Lumen
- Finish: White/ Black/ Silver/ Satin Nickel

K3023S
- Single mini head, 10W/850 Lumen
- Finish: White/ Black/ Silver/ Satin Nickel

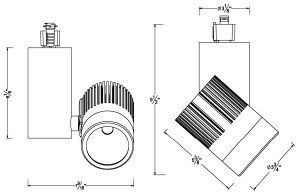

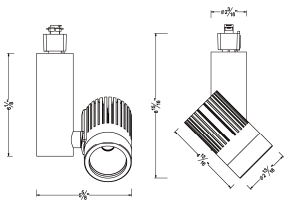

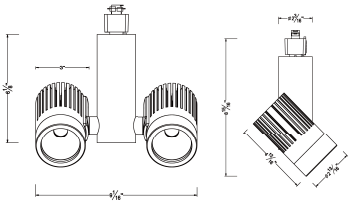

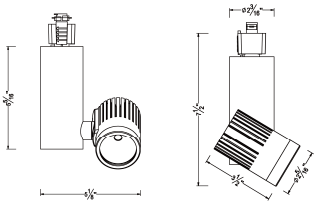

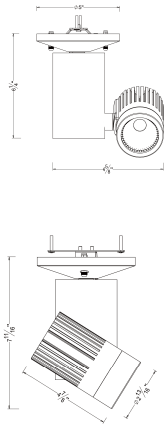

FM3024
- Ceiling mounted single head

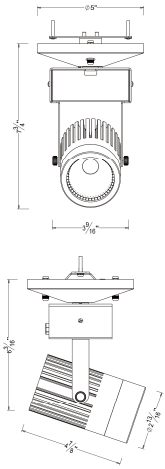

FM3024A
- Ceiling mounted single head

ORDER MATRIX | Example: FM3024-BK-ND120-P-30-27K-16

A	B	C	D	E	F	G

A	Series
FM3024	COB Track Lighting
FM3024A	COB Track Lighting

B	Finish
WH	White
BK	Black
SV	Silver
SN	Satin Nickel

B	Power Supply
ND120	Non-Dimming 120V
ND277	Non-Dimming 277V
D120	0-10V Dimming 120V
D277	0-10V Dimming 277V

D	Available Chips
P	Philips
R	Cree
E	Epistar
S	Seoul
O	Osram

E	Watt/ Lumen
30	30W/ 2550LM
32	32W/ 2720LM

F	Color Temperature
27K	2700K
30K	3000K
40K	4000K
50K	5000K
60K	6000K

G	Beam Spread
16	16° Spot
24	24° Narrow Flood
32	32° Flood
50	50° Wide Flood

LED Light Engine:
- Color Temperature 2700K-6000K
- CRI 80+
- 3 Step MacAdam (3 SDMC)
- Passive aluminum heat sink
- 50,000 hrs average rated life

Electrical System:
- 120V/277V 50/60Hz input
- Over voltage, over current and short circuit protection: Auto recovery
- MTBF > 100,000 hours

Optics:
- 16° Spot, 24° Narrow Flood, 32° Flood, and 50° Wide Flood

Dimming:
- Track Dimming
  - (ELV) reverse phase control dimmers. 120V only.
  - Dimmable 100 – 10%
- Canopy Dimming
  - ELV Dimming 120V
  - 0-10V Dimming 120V or 277V

Compatibility:
- Track luminaire is designed for use with the following track systems:
  - Single Circuit/Single Neutral 120V
  - Two Circuit/Single Neutral 120V
  - Two Circuit / Two Neutral 120V
  - Two Circuit / Two Neutral 277V

Mounting:
- Mounts to a standard 4” square or octagon junction box

Listing & Warranty:
- ETL listed to US and Canadian standards for wet locations
- 5-Year Limited Warranty

Liteharbor®
Lighting Technology

Liteharbor Lighting Technology Co., Ltd.

Tel: +86-757-8180-8675 Fax: +86-757-8180-8685
E-mail:info@liteharbor.com Website:www.liteharbor.com
Address: New Industry Area, Hecun, Danzao Town, Nanhai,
Foshan City, China

Scan QR Code