Liteharbor Lighting Technology Co., Ltd.

Item No.: RT4001

Input voltage/ frequency: 120VAC 0.080 AMPS 9.3W 60Hz
Dimensions: 102mm (4” IN) DIA X 140mm (5.5” IN) HEIGHT

Description:
LED retrofit luminaire conversion kit for recessed housing
Suitable for wet locations
Suitable for type IC, NON-IC or air tight housing

Optics
Anyone can mount a chip to a heat sink and make a down light.
Gather the light scattered by the LED chip, shape it into a functional beam with a state of the art reflector, integrate the light through a smooth reflector
to minimize brightness, then top it all off with a glare reducing cone that has a 55°cut-off.
Module LED consuming less than 10 Watts and producing over 416 lumens. Available in Baffle, Reflector & Wall Wash options.

Durability
Die-cast aluminum housing and heat management system are engineered for extremely long life and service period. Without proper heat management.
Our die-cast system pulls the heat from the LED chip, allowing the continued cool operation for years.

Repeatability means quality
From our chip selection process, to our driver, to the thermal management, the Liteharbor LED Module is engineered for quality.
All Liteharbor LED luminaries are rated at 80+ CRI and 27K, 30K, 35K, 40K and 51K,as rated and tested to LM-79 and LM-80 standards by an outside laboratory, and meets the California Title-24 compliance standards.
Our stringent chip specifications to accept only those chips that produce no ultra violet light and with very minimal infrared.

Add：New Industry Area Hecun Danzao Town Nanhai Foshan City Guangdong China

TEL: +86-757-8180 8687	**E-mail: info@liteharbor.com**	**Specifications subject to change w/o notice**
FAX: +86-757-8180 8685	**Website: www.liteharbor.com**	**Revision: Jan. 2014**

Dimmable

The Liteharbor Module LED is dimmable down to 15% of initial light output by using an electronic low voltage dimmer. When using any of these dimmers, all power ratings and installation instructions from dimmer manufacturer must be followed.

Dimmer control must have same AC input rating as the dimmable power supply driver it connects to.

Other electronic low voltage dimmers may be compatible, but have not been tested by Liteharbor LED Lighting.

Installation

Socket adapter removes from module, allowing installation to be quick and easy.

Simply screw in the adapter and plug in the module.

Turning off the entire module is not required.

Utilizes industry standard friction blades, installs in most 4" incandescent down lights. Insert friction blades into can and press trim to ceiling.

Add: New Industry Area Hecun Danzao Town Nanhai Foshan City Guangdong China

TEL: +86-757-8180 8687 | **E-mail: info@liteharbor.com** | **Specifications subject to change w/o notice**

FAX: +86-757-8180 8685 | **Website: www.liteharbor.com** | **Revision: Jan. 2014**

Liteharbor Lighting Technology Co., Ltd.

Item No.: RT4002

4" 416 Lumen LED Retrofit Module

Features

Greater light output than a 13W CFL or a 50W BR20 while consuming less than 10W of power.

Optics

Anyone can mount a chip to a heat sink and make a down light.

Gather the light scattered by the LED chip, shape it into a functional beam with a state of the art reflector, integrate the light through a smooth reflector to minimize brightness, then top it all off with a glare reducing cone that has a 55° cut-off. **Module LED** consuming less than 10 Watts and producing over 416 lumens. Available in Baffle, Reflector & Wall Wash options.

Durability

Die-cast aluminum housing and heat management system are engineered for extremely long life and service period. Without proper heat management, any LED luminaire will fail. Our die-cast system pulls the heat from the LED chip, allowing the continued cool operation for years. Life tests have shown the Liteharbor **Module LED** light output will be maintained at 70% of initial at 50,000 hours of operation. Our LED driver is rated for 50 to 60 Hz at 120V input, produces less than 10% THD, has a power factor between 0.90 and 1.00 and is thermal protected for additional safety.

Repeatable

Repeatability means quality. From our chip selection process, to our driver, to the thermal management, the Liteharbor LED Module is engineered for quality. All Liteharbor LED luminaries are rated at 80+ CRI and 27K, 30K, 35K, 40K and 51K, as rated and tested to LM-79 and LM-80 standards by an outside laboratory, and meets the California Title-24 compliance standards. Our stringent chip specifications to accept only those chips that produce no ultra violet light and with very minimal infrared.

Dimmable

The Liteharbor **Module LED** is dimmable down to 15% of initial light output by using an electronic low voltage dimmer. When using any of these dimmers, all power ratings and installation instructions from dimmer manufacturer must be followed. Dimmer control must have same AC input rating as the dimmable power supply driver it connects to. Other electronic low voltage dimmers may be compatible, but have not been tested by Liteharbor LED Lighting.

Installation

Socket adapter removes from module, allowing installation to be quick and easy. Simply screw in the adapter and plug in the module. Turning off the entire module is not required. Utilizes industry standard friction blades, installs in most 4" incandescent down lights. Insert friction blades into can and press trim to ceiling.

Add: New Industry Area Hecun Danzao Town Nanhai Foshan City Guangdong China

TEL: +86-757-8180 8687	**E-mail: info@liteharbor.com**	**Specifications subject to change w/o notice**
FAX: +86-757-8180 8685	**Website: www.liteharbor.com**	**Revision: Jan. 2014**

Liteharbor Lighting Technology Co., Ltd.

Item No.: RT4003

Description

LEDR4/3K- 4" DIMMABLE LED DOWNLIGHT BY FEIT ELECTRIC

The dimmable 4" LED retrofit kit by Feit Electric is a bright and efficient unit. This unit delivers the performance of incandescent downlights while reducing energy and operating cost by 80% and requiring virtually no maintenance. Ideal for general lighting in residential and commercial applications, the damp rated unit is a winner!

Incredibly easy to install
10 watts: reduces energy use and operating cost by 80%
CRI 80
500 lumens output is equivalent to 50 Watt incandescent bulb
40,000 hour life, Average 36 years, lasts 25X's longer than conventional lighting for maintenance free
Operation Smooth dimming down to 5% with most all dimmers
Soft white light: 3000K color temperature
RoHS Compliant UL
Approved for Damp Locations
Limited 5 Year Warranty Includes Medium Base Adapter
Mercury Free
No ultraviolet, safe for artwork
Instant on, Full Brightness
Fits any 4" incandescent or LED housing

Add: New Industry Area Hecun Danzao Town Nanhai Foshan City Guangdong China

TEL: +86-757-8180 8687 | **E-mail: info@liteharbor.com** | **Specifications subject to change w/o notice**

FAX: +86-757-8180 8685 | **Website: www.liteharbor.com** | **Revision: Jan. 2014**

RT4005
LED RECESSED LIGHT

Catalog #		Prepared by	LiteHarbor
Project		Date	
Notes			

UNIQUELY ENGINEERED FOR NEW AND EXISTING CONSTRUCTION

The Liteharbor Module LED has been engineered for new construction where Title-24's "No Edison Socket" mandate has been initiated. A dedicated housing installs the same as any other Liteharbor Lighting product and features our adjustable, lockable and tiltable nail bars. The Module LED can also be installed into most 4-inch incandescent downlights by using our unique Edison adapter.

FEATURES

Greater light output than a 18W CFL or an 65W BR30 while consuming less than 10W of power.

INSTALLATION

1) Socket adapter removes from module, allowing installation to be quick and easy. Simply screw in the adapter and plug in the module. Turning off the entire module is not required.
2) Utilizes industry standard V or torsion springs, installs in most 5" incandescent. down lights Insert torsion springs into can and press trim to ceiling.

OPTICS

Anyone can mount a chip to a heat sink and make a down light.
Gather the light scattered by the LED chip, shape it into a functional beam with a state of the art reflector, integrate the light through a smooth reflector to minimize brightness,then top it all off with a glare reducing cone that has a 55-degree cut-off.
Now you have the Liteharbor-engineered, superior quality, Module LED consuming less than 12 watts and producing over 400 lumens.

DURABILITY

Die-cast aluminum housing and heat management system are engineered for extremely long life and service period. Without proper heat management, any LED luminaire will fail. Our die-cast system pulls the heat from the LED chip, allowing the continued cool operation for years. Life tests have shown the Liteharbor Module LED light output will be maintained at 70% of initial at 50,000 hours of operation.
Our LED driver is rated for 50 to 60 Htz at 120V input, produces less than 10% THD, has a power factor between 0.90 and 1.00 and is thermal protected for additional safety. In installations requiring 277V, we offer a step-down transformer option that is field installable.

REPEATABLE

Repeatability means quality. From our chip selection process, to our driver, to the therma management. The Liteharbor LED Module is engineered for quality.
All Liteharbor LED luminaries are rated at 85+ CRI and 27K, 30K, 35K, 40K and 51K, as rated and tested to LM-79 and LM-80 standards by an outside laboratory.
Our stringent chip specifications to accept only those chips that produce no ultra violet light and with very minimal infrared.

DIMMABLE

The Liteharbor is dimmable down to 15% of initial light output by using an electronic low voltage dimmer.
When using any of these dimmers, all power ratings and installation instructions from dimmer manufacturer must be followed.
Dimmer control must have same AC input rating as the dimmable power supply driver it connects to.

Liteharbor Lighting Technology Co., Ltd.
New Industry Area Hecun Danzao Town
Nanhai Foshan City Guangdong China
TEL: +86-757-8180 8687
FAX: +86-757-8180 8685
E-mail: sales@liteharbor.com
Website: www.liteharbor.com
Specifications subject to change w/o notice
Revision: Jan. 2013

RT4005
LED RECESSED LIGHT

Catalog #		Prepared by	LiteHarbor
Project		Date	
Notes			

INTERCHANGEABLE

The Liteharbor Module LED system works in our dedicated housings and our existing 4”incandescent housings, but is also suitable for using in most 4-inch recessed downlight housing.

ADAPTABLE

All Liteharbor Module LED luminaries are shipped standard with our custom engineered Edison adapter. This adapter assembly allows the luminaries to install directly into existing Liteharbor 4” downlight housings and most other 4-inch downlight housings.

OUR WORD

The Liteharbor Module LED is warranted for 2 years of flawless operation. As a system, we stand behind the entire Liteharbor products from housing to bar hangers. When the Module LED is installed in retrofit applications, only the Module LED itself is warranted.

DIMENSIONS

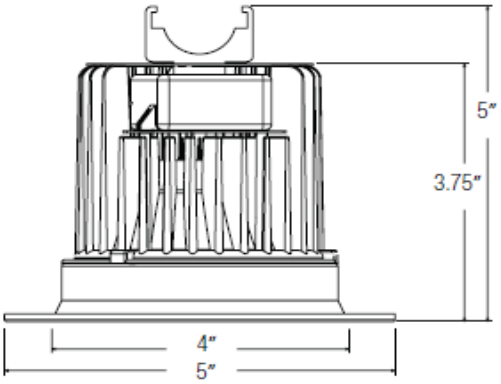

INPUT VOLT.	INPUT FREQ	INPUT CUR.	LED DRIVER CUR.
120V	60Hz	83mA	300mA

INPUT POWER	LED POWER	THD	POWER FACTOR
10W (+/-5%)	10W	9%	>0.9

PHOTOMETRICS

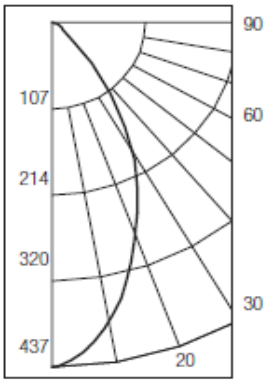

Zonal Lumens Summary

Zone	Lumens	%Lamp	%Fixt
0-30	##	N.A.	60
0-40	##	N.A.	82
0-60	##	N.A.	99
0-90	##	N.A.	100

LED RECESSED LIGHT

Liteharbor Lighting Technology Co., Ltd.
New Industry Area Hecun Danzao Town
Nanhai Foshan City Guangdong China

TEL: +86-757-8180 8687
FAX: +86-757-8180 8685
E-mail: sales@liteharbor.com

Website: www.liteharbor.com

Specifications subject to change w/o notice
Revision: Jan. 2013

Liteharbor Lighting Technology Co., Ltd.

Item No.: RT5001

Suitable for new construction, remodel and retrofit installation, fit into both 5-inch and 6-inch standard and shallow downlight housings or other 5-inch or 6-inch compatible recessed downlight housings. Providing excellent color quality with a rendering of 83 CRI and a warm, white color temperature of 3000K, the Liteharbor 6” Retrofit Baffle Trim features a convex lens that provides uniform illumination and has the familiar appearance of a BR lamp.

Commercial Electric 6 in. Recessed White LED Retrofit
12 commercial electric LED 5"& 6" White LED Trim Light

Add：New Industry Area Hecun Danzao Town Nanhai Foshan City Guangdong China

TEL: +86-757-8180 8687 | **E-mail: info@liteharbor.com** | **Specifications subject to change w/o notice**

FAX: +86-757-8180 8685 | **Website: www.liteharbor.com** | **Revision: Jan. 2014**

RT5002
LED RECESSED LIGHT

Catalog #		Prepared by	LiteHarbor
Project		Date	
Notes			

UNIQUELY ENGINEERED FOR NEW AND EXISTING CONSTRUCTION

The Liteharbor Module LED has been engineered for new construction where Title-24's No Edison Socket" mandate has been initiated. A dedicated housing installs the same as any other Liteharbor Lighting product and features our adjustable, lockable and tiltable nail bars. The Module LED can also be installed into most 5-inch incandescent downlights by using our unique Edison adapter.

FEATURES

Greater light output than a 18W CFL or an 65W BR30 while consuming less than 12W of power.

INSTALLATION

1) Socket adapter removes from module, allowing installation to be quick and easy. Simply screw in the adapter and plug in the module. Turning off the entire module is not required.
2) Utilizes industry standard V or torsion springs, installs in most 5" incandescent. down lights Insert torsion springs into can and press trim to ceiling.

OPTICS

Anyone can mount a chip to a heat sink and make a down light.
Gather the light scattered by the LED chip, shape it into a functional beam with a state of the art reflector, integrate the light through a smooth reflector to minimize brightness, then top it all off with a glare reducing cone that has a 55-degree cut-off. Now you have the Liteharbor-engineered, superior quality, Module LED consuming less than 12 watts and producing over 500 lumens.

DURABILITY

Die-cast aluminum housing and heat management system are engineered for extremely long life and service period. Without proper heat management, any LED luminaire will fail. Our die-cast system pulls the heat from the LED chip, allowing the continued cool operation for years. Life tests have shown the Liteharbor Module LED light output will be maintained at 70% of initial at 50,000 hours of operation.
Our LED driver is rated for 50 to 60 Htz at 120V input, produces less than 10% THD, has a power factor between 0.90 and 1.00 and is thermal protected for additional safety. In installations requiring 277V, we offer a step-down transformer option that is field installable.

REPEATABLE

Repeatability means quality. From our chip selection process, to our driver, to the therma management. The Liteharbor LED Module is engineered for quality.
All Liteharbor LED luminaries are rated at 85+ CRI and 27K, 30K, 35K, 40K and 51K, as rated and tested to LM-79 and LM-80 standards by an outside laboratory.
Our stringent chip specifications to accept only those chips that produce no ultra violet light and with very minimal infrared.

DIMMABLE

The Liteharbor is dimmable down to 15% of initial light output by using an electronic low voltage dimmer.
When using any of these dimmers, all power ratings and installation instructions from dimmer manufacturer must be followed.
Dimmer control must have same AC input rating as the dimmable power supply driver it connects to.

Liteharbor Lighting Technology Co., Ltd.
New Industry Area Hecun Danzao Town
Nanhai Foshan City Guangdong China
TEL: +86-757-8180 8687
FAX: +86-757-8180 8685
E-mail: sales@liteharbor.com
Website: www.liteharbor.com
Specifications subject to change w/o notice
Revision: Jan. 2013

RT5002
LED RECESSED LIGHT

Catalog #		Prepared by	LiteHarbor
Project		Date	
Notes			

INTERCHANGEABLE

The Liteharbor Module LED system works in our dedicated housings and our existing 5”incandescent housings, but is also suitable for using in most 5-inch recessed downlight housing.

ADAPTABLE

All Liteharbor Module LED luminaries are shipped standard with our custom engineered Edison adapter. This adapter assembly allows the luminaries to install directly into existing Liteharbor 5” downlight housings and most other 5-inch downlight housings.

OUR WORD

The Liteharbor Module LED is warranted for 2 years of flawless operation. As a system, we stand behind the entire Liteharbor products from housing to bar hangers. When the Module LED is installed in retrofit applications, only the Module LED itself is warranted.

DIMENSIONS

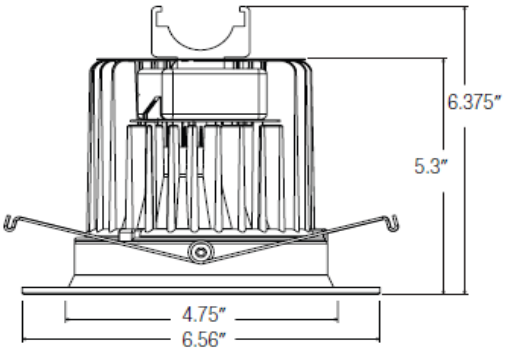

INPUT VOLT.	INPUT FREQ	INPUT CUR.	LED DRIVER CUR.
120V	60Hz	83mA	300mA

INPUT POWER	LED POWER	THD	POWER FACTOR
10W (+/-5%)	10W	9%	>0.9

PHOTOMETRICS

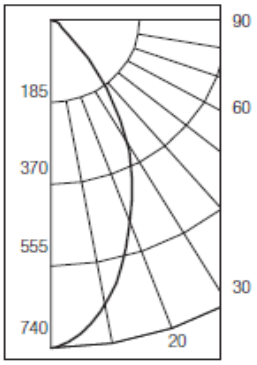

Zonal Lumens Summary

Zone	Lumens	%Lamp	%Fixt
0-30	##	N.A.	72
0-40	##	N.A.	91
0-60	##	N.A.	99
0-90	##	N.A.	100

LED RECESSED LIGHT

Liteharbor Lighting Technology Co., Ltd.
New Industry Area Hecun Danzao Town
Nanhai Foshan City Guangdong China

TEL: +86-757-8180 8687
FAX: +86-757-8180 8685
E-mail: sales@liteharbor.com

Website: www.liteharbor.com

Specifications subject to change w/o notice
Revision: Jan. 2013

Liteharbor Lighting Technology Co., Ltd.

Item No.: RT6002

Construction:

LED: Lighting class high power LED from a nationally recognized manufacturer

Lens: PC constructed with high-tech micro-lens for an efficient light transmission ratio and diffusion - impact resistant.

Body: Die cast aluminum alloy

Mounting Spring: Torsion spring steel

Energy Efficiency:

Meets or exceeds energy efficiency requirements for ENERGY STAR®

Air Tight Compliant

Installation:

Installs into any 5" or 6" Edison based socket in 3 quick and easy steps

Step One: remove old trim and bulb

Step Two: twist adapter into socket and plug new fixture into socket adapter

Step Three: insert new LED trim

Add: New Industry Area Hecun Danzao Town Nanhai Foshan City Guangdong China

TEL: +86-757-8180 8687 | **E-mail: info@liteharbor.com**

FAX: +86-757-8180 8685 | **Website: www.liteharbor.com**

Specifications subject to change w/o notice

Revision: Jan. 2014

Liteharbor Lighting Technology Co., Ltd.

Item No.: RT6003

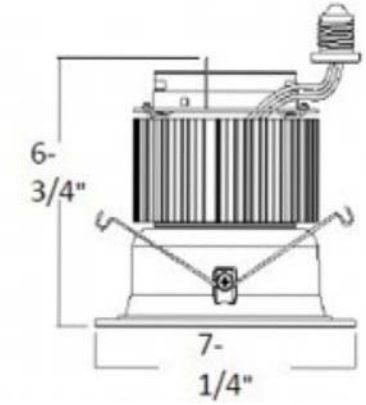

cUL listed for Wet Location
10% - 100% Dimmable with most incandescent, low voltage and cfl dimmers
Save 75% compared to incandescent
LED driver built-in
Title 24 Compliant
Case Qty 6
Retrofits most standard 6" recessed cans
50,000 long life hours
120V, 50-60Hz
12 LEDs -4000K Color Temperature
703 Lumens
No tools required for installation
Dimensions 6 3/4" H x 7 1/4" OD

Compatible Dimmers

Mfgr	Model #	Use For	Dimming Rate
Leviton	CTCL-153PDH	CFL / LED	20% - 100%
Leviton	S-600PR-WH	Incandescent / Halogen 120V / LED	10% - 100%
Leviton	CT-600PR-LA	Incandescent / Halogen 120V / LED	10% - 100%
Leviton	6631	Incandescent / Single Pole / LED	10% - 100%
Leviton	6633	Incandescent / Single Pole / LED	10% - 100%

Add: New Industry Area Hecun Danzao Town Nanhai Foshan City Guangdong China

TEL: +86-757-8180 8687 | **E-mail: info@liteharbor.com** | **Specifications subject to change w/o notice**

FAX: +86-757-8180 8685 | **Website: www.liteharbor.com** | **Revision: Jan. 2014**

Liteharbor Lighting Technology Co., Ltd.

Item No.: RT6004

DIMMABLE

All Liteharbor LED Retrofit Downlight conversion kits including DIMMING control via new or existing residential dimmer switches. Using dimmer switches, in tandem with Liteharbor's retrofit downlights, can save up to 70% on utility bills associated with traditional downlight fixtures.

ENERGY EFFICIENT, UTILITY COSTS SAVINGS, LED LIGHTING

Liteharbor is dedicated to saving homeowners money, either through lower monthly electrical costs (with LED using 50% less energy than traditional downlights) or through lower monthly air conditioning costs (with LED Lighting significantly reducing radiant heat common to traditional downlighting sources).

Long Lasting

Litehabor is dedicated to saving homeowners money and efforts to maintain downlights, through longer LED lamp lives (with LED lighting sources lasting upwards of 10+ years versus traditional downlight lamps lasting 2-3 years) as well as extending the time between maintenance and servicing (i.e. climbing a ladder to replace the LED lighting source every 20+ years versus every 2-3 years with traditional lamp sources).

*24 year lifespan calculations are based on an average of 4 hours of operation per day.

WIDE APPLICATION

Liteharbor LED Retrofit Downlight conversion kits offer a wide range of downlighting applications, from residential downlights (Kitchens, Bathrooms, Living Rooms, etc.) to department stores and retail shops (Display Areas, Aisle Spacing, etc.) to commercial and office applications (executive offices, cubicle areas, conference rooms, bathrooms, and break room areas).

COMPATIBLE DESIGN – EASY TO INSTALL

Litehabor LED Retrofit Downlight conversion kits offer a compatible design, one that is easy to install into existing downlight cans and without the need for installation tools. Reference LG's list of approved downlight housings for compatible installation models.

Add: New Industry Area Hecun Danzao Town Nanhai Foshan City Guangdong China

TEL: +86-757-8180 8687	**E-mail: info@liteharbor.com**	**Specifications subject to change w/o notice**
FAX: +86-757-8180 8685	**Website: www.liteharbor.com**	**Revision: Jan. 2014**

Liteharbor Lighting Technology Co., Ltd.

Item No.: RT6005

The Commercial Electric 6 in. LED Disk Light by Cree makes it easy to upgrade your existing lighting to energy efficient LED technology.

The Disk Light can be installed in an existing recessed can or wherever a 4 in. junction box is installed - making it extremely versatile for both retro-fit and new installation.

The semi recessed lens gives the appearance of a higher end recessed fixture and is instant on and fully dimmable. The LED disk Light is perfect for kitchens, hallways, bathrooms, closets, laundry, porches and garage work rooms.

Details:

Brightness: 650 Lumens

Life: 50,000 hours or 32 years (based on 3 hours/day)

Light appearance: 2700K (soft white)

Energy used: 14.5 Watts (65 Watt equivalent)

Energy star rated

3 Year Limited Warranty

Add: New Industry Area Hecun Danzao Town Nanhai Foshan City Guangdong China

TEL: +86-757-8180 8687 | **E-mail: info@liteharbor.com** | **Specifications subject to change w/o notice**

FAX: +86-757-8180 8685 | **Website: www.liteharbor.com** | **Revision: Jan. 2014**

Liteharbor Lighting Technology Co., Ltd.

Item No.: RT6006

6" Architectural LED Retrofit Downlight

Features

Greater light output than a 26W & 32W CFL while consuming less than 16W & 21W of power. LED luminaires are ideally suited for use in hospitality, health care, commercial, institutions, retail and other architectural applications.

Optics

LED Optilux technology combines unmatched performance with visual comfort. Spun 0.05" thick reflector has been designed to gather the light scattered by the LED chip and shape it into functional beams that minimize brightness and glare, while eliminating lamp image. Proprietary dual level upper and lower reflector design allows for optimum glare control. Liteharbor engineered superior quality, light engine; producing 800 lumens (16W) & 1100 lumens (21W).

Performance

Operating system delivers 800 lumens (16W) & 1100 lumens (21W) with a 4100K color temperature. All MAXILUME LED luminaries are rated at 80+ CRI. All LED luminaries are rated and tested to LM-79 and LM-80 standards by an independent laboratory.

Thermal Management System

Using a proprietary cool LED Advanced Thermodynamic Design, Die-cast aluminum housing and heat management system are engineered for extremely long life and service period. Heat sink is attached to top of housing. The LED light engine is attached to the die-cast heat sink and is easily replaceable and upgradable. Life tests have shown the MAXILUME light engine output will be maintained at 70% of initial at 50,000 hours of operation.

Dimmable

The LED system is fully dimmable down to 10% of initial light output with a 0-10 Volt dimmer when ordered with the following options (120-DIM10, 277-DIM10).

LED Driver/Junction Box

The LED driver is rated for 50 to 60Hz at 120V/277V input, produces less than 20% THD, and has a power factor between 90% and 100% and is thermally protected for additional safety.

LED driver is installed on the junction box cover so it may be serviced from below the ceiling. UL Listed for

Add: New Industry Area Hecun Danzao Town Nanhai Foshan City Guangdong China

TEL: +86-757-8180 8687	E-mail: info@liteharbor.com	Specifications subject to change w/o notice
FAX: +86-757-8180 8685	Website: www.liteharbor.com	Revision: Jan. 2014

through-branch circuit wiring, provided with four ½" knockouts, one ¾" knockout and four Romex knockouts with true pryout slots and strain clamps. Designed for straight through conduit runs.

Mounting

Our retrofit is designed to install into an existing downlights mounting frame and convert them into energy efficient LED downlights. Flex is designed to attach into existing junction box.

Our Word

Warranted for 5 years. As a system, we stand behind the entire product.

Listing

c-UL-us/ c-ETL-us listed for Damp location
c-UL-us/ c-ETL-us listed for feed Through Wiring
LM79 / LM80

Add: New Industry Area Hecun Danzao Town Nanhai Foshan City Guangdong China

TEL: +86-757-8180 8687 | **E-mail: info@liteharbor.com** | **Specifications subject to change w/o notice**
FAX: +86-757-8180 8685 | **Website: www.liteharbor.com** | **Revision: Jan. 2014**

Liteharbor Lighting Technology Co., Ltd.

Item No.: RT6007

Features

12-13 watt input power

ENERGY STAR Qualified (WH)

New Construction with DBXQL housing; Can be used to meet California Title 24 requirements for commercial buildings

Retrofit applications with compatible 6" housings from Liteharbor or others using the universal screw base adapter

Lumen output and distribution comparable up to a 75W PAR incandescent lamp or a 26 watt CFL lamp

Dimmable to 15% with most standard dimmers

Easy installation with (3) friction spring clips and diffuse polycarbonate lens controls direct glare

Up to 60,000 hours at 70% lumen maintenance per TM-21

Integral Aluminum heat sink to maximize life expectancy and lumen output

UL/cUL classified or cCSAus listed in Liteharbor and many competitive housings

Suitable for wet locations

Add: New Industry Area Hecun Danzao Town Nanhai Foshan City Guangdong China

TEL: +86-757-8180 8687 | **E-mail: info@liteharbor.com**

FAX: +86-757-8180 8685 | **Website: www.liteharbor.com**

Specifications subject to change w/o notice

Revision: Jan. 2014

Liteharbor Lighting Technology Co., Ltd.

Item No.: LC1536

120V LED LOW PROFILE SURFACE/RECESSED DISK LIGHT MOUNT ILLUSTRATION

120V LED disk light provides surface mount light for most construction. It fits most 4 inch junction boxes and can replace 5 inch and 6 inch recessed can lights to eliminate baffles. And it it suitable for use in dry, damp locations indoor/outdoor enclosed applications
This fixture can be surface mounted or recessed mounted.

Steps for surface mounting
Before installation, please set two screws in the junction box and do not drive screws to the end of junction box. Plug the white wire from the junction box to the driver white wire connector and plug the black wire to the black wire connector of the driver. Then attach the disk light to the junction box. Plug the grounding wire to the ground connector of the driver. Then use screw driver to drive the screw to the end and make the disk light tightly fix on the junction box. Finally twist diffuser on the disk light metal enclosure and lock the diffuser in place.

Steps for Recessed mounting
Make sure to release E26 lamp base inside can to be replaced by UL listed E26 base adapter and find white and black plug from E26 base adapter. To use wire plug to connect white socket of the LED driver. And connect driver grounding wire in the can grounding screw.
Then squeeze the springs of LED disk light to be inserted into the can and it can be done one by one fro both sides. To make sure to hook them on the disk light should be pushed on to the surface of the can to make sure that the disk light is attached to the ceiling surface. And then twist the diffuser, which should be locked in the disk metal enclosure and keep the diffuser in place of the disk light surface.

Technical Specifications
120V 60 Hz AC operation
15W 36pcs LED chips
Light source lumens: 1250; Fixture lumens: 1050
Translucent white PC Opal Diffuser
Two mounting screws
Philips screw driver sold separately
Two year limited warranty

Add: New Industry Area Hecun Danzao Town Nanhai Foshan City Guangdong China

TEL: +86-757-8180 8687	**E-mail: info@liteharbor.com**	**Specifications subject to change w/o notice**
FAX: +86-757-8180 8685	**Website: www.liteharbor.com**	**Revision: Jan. 2014**